Hierarchical and High-Girth QC LDPC Codes

Yige Wang, *Member, IEEE*, Stark C. Draper, *Member, IEEE*, Jonathan S. Yedidia, *Senior Member, IEEE*

arXiv:1111.0711v1 [cs.IT] 3 Nov 2011

***Abstract*—We present a general approach to designing capacity-approaching high-girth low-density parity-check (LDPC) codes that are friendly to hardware implementation. Our methodology starts by defining a new class of *hierarchical* quasi-cyclic (HQC) LDPC codes that generalizes the structure of quasi-cyclic (QC) LDPC codes. Whereas the parity check matrices of QC LDPC codes are composed of circulant sub-matrices, those of HQC LDPC codes are composed of a hierarchy of circulant sub-matrices that are in turn constructed from circulant sub-matrices, and so on, through some number of levels. We show how to map any class of codes defined using a protograph into a family of HQC LDPC codes. Next, we present a girth-maximizing algorithm that optimizes the degrees of freedom within the family of codes to yield a high-girth HQC LDPC code. Finally, we discuss how certain characteristics of a code protograph will lead to inevitable short cycles, and show that these short cycles can be eliminated using a "squashing" procedure that results in a high-girth QC LDPC code, although not a hierarchical one. We illustrate our approach with designed examples of girth-10 QC LDPC codes obtained from protographs of one-sided spatially-coupled codes.**

I. Introduction

Two broad classes of methods have emerged for the construction of low-density parity-check (LDPC) codes [1], [2]. One set of methods is based on highly random graph constructions, while the other is based on structured algebraic constructions. It is now well-known that random constructions (see, e.g., [3]–[7]) can produce LDPC codes that closely approach the Shannon capacity. However, highly random constructions are not easy to implement in hardware as the irregular connections between check and variable nodes in the code graph imply high wiring complexity. In actual implementations, more structured constructions have been strongly preferred because they result in much more practical wiring and more straightforward parallelism in the decoders.

Quasi-cyclic LDPC (QC LDPC) codes are a particularly practical and widely-used class of structured LDPC codes. These codes have a parity check matrix which is broken into sub-matrices that have a circulant structure. QC LDPC codes are featured in a variety of communications system standards, such as IEEE 802.16e [8], DVB-S2 [9] and 802.11 [10]. In view of their practicality, we focus in this paper on the design of QC LDPC codes that have good decoding performance.

For nearly any application, it is important to optimize decoding performance in the "water-fall" regime where the signal-to-noise ratio (SNR) is relatively low. The standard way to do that for irregular random constructions is to use "density-evolution" or "EXIT chart" techniques to obtain the degree distribution that optimizes the code threshold in the asymptotic limit of long block lengths [7]. These techniques can also be adapted to QC LDPC codes [11].

However, for some applications, optimizing water-fall performance is not sufficient, and one must also avoid the "error floors" that plague many LDPC codes in the higher SNR regime. An "error floor" in the performance curve means that the decoding failure rate does not continue to decrease rapidly as the SNR increases. Eliminating or lowering error floors is particularly important for applications that have extreme reliability demands, including magnetic recording and fiber-optic communication systems.

In the past, QC LDPC codes have been constructed based on a wide variety of mathematical ideas, including finite geometries, finite fields, and combinatorial designs [2], [12]–[18]. Recently, there has also been great interest in the class of "convolutional" [19], [20] or "spatially-coupled" [21] LDPC codes. These codes have much more structured than traditional random constructions. They have also been shown, using density evolution techniques, to approach Shannon capacity closely, or even provably to achieve it on the binary erasure channel (BEC) [21]. These codes are significant here, because they can be implemented using quasi-cyclic constructions, and they should thus be able to achieve very good performance while retaining the practicality of other structured QC LDPC codes. In this paper, we will focus on the design of QC LDPC codes based on structures that let them perform near the Shannon limit in the waterfall regime (such as spatially coupled codes) but we also aim for excellent error floor performance.

Error floor issues for LDPC codes are investigated in [22], [23], which shows that error floors in belief propagation (BP) LDPC decoders are generally caused by "trapping sets." A trapping set is a set of a small number of bits that reinforce each other in their incorrect beliefs. Trapping sets of bits are invariably arranged in clustered short cycles in a code's Tanner graph [24]. Therefore, one way to try to remove trapping sets is to design the code's Tanner graph carefully so that the dangerous clusters of short cycles do not exist.

An alternative, and at least conceptually simpler approach, is to design codes with larger girths—the "girth" of a code is the length of the shortest cycle in the code graph. By removing short cycles, we remove large swaths of potentially dangerous configurations of cycles and, at one fell swoop, hopefully lower the error floor. Motivated by this idea, in this paper, we focus on optimizing the girth of QC LDPC codes that have also been optimized for waterfall performance. In this way we hope to design a practical code that simultaneously has good waterfall and error floor performance.

Y. Wang is with the Mitsubishi Electric Research Laboratories, Cambridge, MA 02139 (yigewang@ieee.org).

S. C. Draper is with the Dept. of Electrical and Computer Engineering, University of Wisconsin, Madison, WI 53706 (sdraper@ece.wisc.edu).

J. S. Yedidia is with the Mitsubishi Electric Research Laboratories, Cambridge, MA 02139 (yedidia@merl.com).

There has been considerable work on optimizing girth in LDPC codes. In [25] a progressive-edge growth (PEG) algorithm is proposed for random LDPC codes. The PEG technique is generalized to QC LDPC codes in [26]. Another approach to optimizing the girth of QC LDPC codes is studied in [27], where high-girth QC LDPC codes are obtained using a random "guess-and-test" algorithm. Shortened array codes with large girth are proposed in [30]. However, after shortening, the resulting codes no longer have a quasi-cyclic structure. In [31], another class of large girth QC LDPC codes is designed, where the methodology is mainly for regular LDPC codes.

In this paper, we propose a hill-climbing search algorithm for optimizing girth that is more efficient than previous techniques. The hill-climbing algorithm greedily adjusts an initial QC LDPC code (hopefully) to find a code of short length that meets the specified code and girth parameters. Since the algorithm is greedy, it can get stuck in local minima. However, given a set of parameters, the algorithm finds QC LDPC codes of shorter length and in less time than guess-and-test or PEG.

Codes with good water-fall performance inevitably have some irregularity in the degree-distribution of the factor or variable nodes of the code graph. For the case of QC LDPC codes, these irregular distributions are most easily described in terms of "protographs" [28]. Protographs are variants of Tanner graphs where bits and checks of the same type are represented by a single "proto-bit" or "proto-check." In the case of QC LDPC codes, proto-bits can, for example, represent sets of bits belonging to the same circulant sub-matrices.

The protographs that arise in codes that have been optimized for waterfall performance typically have some pairs of proto-bits and proto-checks that are connected by multiple edges. A straightforward way to handle this would be to use QC LDPC codes where the circulant matrices had rows and columns of weight greater than one. However, as we shall see, this direct approach inevitably introduces short cycles into the graph.

The tricky problem of creating QC LDPC codes with good girth and that correspond to protographs optimized for waterfall performance is solved in this paper by a somewhat complicated procedure. First, we need to introduce a new family of generalized QC LDPC codes, which we call "hierarchical" QC LDPC (HQC LDPC) codes. The parity check matrices of these hierarchical codes consist of circulant sub-matrices, which in turn consist of of circulant sub-sub-matrices, and so on for multiple "levels." We show that we can directly transform any protograph with multiple edges between proto-checks and proto-bits into a *two-level* HQC LDPC code with circulant matrices with higher weight at second level.

It turns out that many different hierarchical QC LDPC codes correspond to a particular protograph, and thus many degrees of freedom exist following the "direct" transformation. We use our hill-climbing algorithm to choose from this family to get rid of as many short cycles as possible. However, HQC LDPC codes with weights greater than one at higher levels will also automatically have some short cycles, just as non-hierarchical QC LDPCs do. Our hill-climbing algorithm can do nothing about these "inevitable" cycles but it can, hopefully, eliminate all short non-inevitable cycles. To get ride of the inevitable cycles we introduce a "squashing" procedure. The squashing step destroys the hierarchical structure of the code, but the squashed code nevertheless remains a QC LDPC code that corresponds to the desired protograph. The squashing procedure is computationally trivial. This makes the two-step procedure – first HQC LDPC then squash into a QC LDPC code – much more computationally efficient than directly applying our hill-climbing procedure to maximize the girth of higher-weight QC LDPC codes with the desired protograph structure. Thus hierarchical QC LDPC codes are a necessary intermediate stage in the design of practical QC LDPC codes that will simultaneously have good waterfall and error floor performance.

The rest of the paper will explain in much more detail the ideas outlined above. We begin in Section II by reviewing the standard construction of QC LDPC codes in terms of their parity check matrices. Then in Section III, we review the standard Tanner graph representation of LDPC codes and the "protograph" representation of structured codes. In Section IV we show how short cycles can be identified from the parity check matrix of a QC LDPC code. We discuss why the most direct transformation of the protographs of interesting LDPC codes, such as spatially coupled codes, into QC LDPC codes will lead to inevitable short cycles in the Tanner graph of the resulting codes. This leads us to the heart of our paper, where we introduce hierarchical QC LDPC codes that can be used to solve the problem of inevitable short cycles. In Section V we introduce the most general form of HQC LDPC codes and show that they can be described both in terms of a multi-variate polynomial parity check matrix in multiple variables and in terms of a tree structure. In Section VI, we explain how to find cycles in the Tanner graphs of HQC LDPC codes. In Section VII we describe our hill-climbing algorithm for finding high girth QC LDPC codes and HQC LDPC codes. In Section VIII, we discuss restricted two-level HQC LDPC codes, the direct transformation of protographs into such codes, and the "squashing" procedure that efficiently eliminates inevitable cycles. Finally, in Section IX, we exhibit high-girth QC LDPC codes that simultaneously have good waterfall behavior (because they are spatially-coupled codes) and have good error-floor behavior resulting from their high girth (which in turn is a result of the fact that they are squashed versions of HQC LDPC codes). Many details and lemmas are deferred to the appendices.

II. Quasi-cyclic LDPC codes

We begin by reviewing the construction of standard quasi-cyclic low-density parity-check (QC LDPC) codes as previously described in the literature [2]. In section V we will generalize these codes and introduce a novel *hierarchical* family of QC LDPC codes.

Before considering the general case of standard QC LDPC codes, it is helpful to start with an important special case, that we will call "weight-I (J, L) regular" QC LDPC codes. The parity check matrix of these codes consists of $J \cdot L$ sub-matrices, each of which is a $p \times p$ circulant permutation matrix.

Let $\mathbf{I}_{i,p}$ denote the circulant permutation matrix, or "cyclic shift matrix," obtained by cyclically right-shifting a $p \times p$

identity matrix by i positions, where $0 \leq i \leq p-1$; $\mathbf{I}_{0,p}$ is thus the $p \times p$ identity matrix. We often suppress the dependence on p, writing $\mathbf{I}_i$ instead of $\mathbf{I}_{i,p}$. As an example, if $p = 4$, then

$$\mathbf{I}_1 = \begin{bmatrix} 0 & 1 & 0 & 0 \\ 0 & 0 & 1 & 0 \\ 0 & 0 & 0 & 1 \\ 1 & 0 & 0 & 0 \end{bmatrix}.$$

We can write the parity check matrix of a weight-I (J, L) regular QC LDPC code using J rows and L columns of $p \times p$ cyclic shift sub-matrices:

$$\mathbf{H} = \begin{bmatrix} \mathbf{I}_{i_{1,1}} & \mathbf{I}_{i_{1,2}} & \cdots & \mathbf{I}_{i_{1,L}} \\ \mathbf{I}_{i_{2,1}} & \mathbf{I}_{i_{2,2}} & \cdots & \mathbf{I}_{i_{2,L}} \\ \vdots & & \ddots & \vdots \\ \mathbf{I}_{i_{J,1}} & \mathbf{I}_{i_{J,2}} & \cdots & \mathbf{I}_{i_{J,L}} \end{bmatrix}. \tag{1}$$

The blocklength of such a code is $N = pL$.

Using $\mathbf{I}_k = (\mathbf{I}_1)^k$, we can re-write (1) as

$$\mathbf{H} = \begin{bmatrix} (\mathbf{I}_1)^{i_{1,1}} & (\mathbf{I}_1)^{i_{1,2}} & \cdots & (\mathbf{I}_1)^{i_{1,L}} \\ (\mathbf{I}_1)^{i_{2,1}} & (\mathbf{I}_1)^{i_{2,2}} & \cdots & (\mathbf{I}_1)^{i_{2,L}} \\ \vdots & & \ddots & \vdots \\ (\mathbf{I}_1)^{i_{J,1}} & (\mathbf{I}_1)^{i_{J,2}} & \cdots & (\mathbf{I}_1)^{i_{J,L}} \end{bmatrix}. \tag{2}$$

We can now abstractly represent $\mathbf{H}$ as a matrix whose entries are powers of a dummy variable x:

$$\mathbf{H}(x) = \begin{bmatrix} x^{i_{1,1}} & x^{i_{1,2}} & \cdots & x^{i_{1,L}} \\ x^{i_{2,1}} & x^{i_{2,2}} & \cdots & x^{i_{2,L}} \\ \vdots & & \ddots & \vdots \\ x^{i_{J,1}} & x^{i_{J,2}} & \cdots & x^{i_{J,L}} \end{bmatrix}. \tag{3}$$

The point of all these trivial re-writings will now become clear: we can generalize such a matrix $\mathbf{H}(x)$ to a parity check matrix whose entries are *polynomials* in x, giving us the *polynomial* parity check matrix of a standard QC LDPC code:

$$\mathbf{H}(x) = \begin{bmatrix} h_{1,1}(x) & h_{1,2}(x) & \cdots & h_{1,L}(x) \\ h_{2,1}(x) & h_{2,2}(x) & \cdots & h_{2,L}(x) \\ \vdots & & \ddots & \vdots \\ h_{J,1}(x) & h_{J,2}(x) & \cdots & h_{J,L}(x) \end{bmatrix}, \tag{4}$$

where

$$h_{j,l}(x) = \sum_{s=0}^{p-1} c_s[j,l] x^s \tag{5}$$

for $1 \leq j \leq J$, $1 \leq l \leq L$.

For *binary* QC LDPC codes, which will be our focus for the rest of this paper, the polynomial coefficients $c_s[j,l]$ must all be 0 or 1.

Example 1: Let $\mathcal{C}$ be a length-9 QC LDPC code described by

$$\mathbf{H} = \left[\begin{array}{ccc|ccc|ccc} 1 & 0 & 0 & 1 & 0 & 0 & 1 & 0 & 0 \\ 0 & 1 & 0 & 0 & 1 & 0 & 0 & 1 & 0 \\ 0 & 0 & 1 & 0 & 0 & 1 & 0 & 0 & 1 \\ \hline 0 & 0 & 0 & 1 & 0 & 0 & 0 & 1 & 1 \\ 0 & 0 & 0 & 0 & 1 & 0 & 1 & 0 & 1 \\ 0 & 0 & 0 & 0 & 0 & 1 & 1 & 1 & 0 \end{array}\right]. \tag{6}$$

For this code $J = 2$, $L = 3$, and $p = 3$, and $\mathbf{H}$ can equivalently be written as

$$\mathbf{H} = \begin{bmatrix} \mathbf{I}_0 & \mathbf{I}_0 & \mathbf{I}_0 \\ \mathbf{0} & \mathbf{I}_0 & \mathbf{I}_1 + \mathbf{I}_2 \end{bmatrix}. \tag{7}$$

The polynomial version of the parity check matrix is

$$\mathbf{H}(x) = \begin{bmatrix} x^0 & x^0 & x^0 \\ 0 & x^0 & x^1 + x^2 \end{bmatrix} = \begin{bmatrix} 1 & 1 & 1 \\ 0 & 1 & x^1 + x^2 \end{bmatrix}. \tag{8}$$

■

In [29], Smarandache and Vontobel classified QC LDPC codes according to the maximum weight among the circulant sub-matrices in their parity check matrix, or equivalently, according to the maximum weight of the polynomials in their polynomial parity check matrix. (The weight of a polynomial as simply the number of non-zero terms in that polynomial.) They defined a "type-M" QC LDPC code as one for which the maximum weight among all polynomial entries $h_{j,l}(x)$ in $\mathbf{H}(x)$ is M. We will change their terminology slightly and call such a code a *weight-M* QC-LDPC code

Since $\mathrm{wt}(h_{2,3}(x)) = 2$ in the code of Example 1—that is, $h_{2,3}(x) = x^1 + x^2$ is a binomial—and because $\mathrm{wt}(h_{2,3}(x)) \geq \mathrm{wt}(h_{j,l}(x))$ for all $1 \leq j \leq J$, $1 \leq l \leq L$, the code in Example 1 is a weight-II QC LDPC code.

For any QC LDPC code, we define the vector of weight sums $\sum_{j=1}^{J} \mathrm{wt}(h_{j,l}(x))$ for $1 \leq l \leq L$, to be the "column weight sum," $\mathrm{wt}_{\mathrm{col}}(\mathbf{H}(x))$, of $\mathbf{H}(x)$. We define the row weight sum $\mathrm{wt}_{\mathrm{row}}$ of $\mathbf{H}(x)$ similarly. Thus, the code of Example 1 has column and row weight sums

$$\mathrm{wt}_{\mathrm{col}}(\mathbf{H}(x)) = [1\ 2\ 3]; \quad \mathrm{wt}_{\mathrm{row}}(\mathbf{H}(x)) = [3\ 3].$$

It should now be clear why we previously referred to codes of the form of equation (1) or (3) as "weight-I" codes, as all the entries in the polynomial parity check matrix are monomials. The class of weight-I codes is more general than that shown in equation (1) though: some of the cyclic shift sub-matrices could be replaced with all-zeros matrices.

As we often work with weight-I QC LDPC codes, and these codes are particularly important in practice, we introduce some additional useful notation for them. We define the *base matrix* of a weight-I QC LDPC code to be the $J \times L$ matrix of powers (circulant shifts) that defines the code, i.e., $\log_x(\mathbf{H}(x))$ where logarithms are taken entry-by-entry, and where we define $\log_x(0)$ to be -1, used to indicate an all-zero sub-matrix. For example, the base matrix corresponding to the parity check matrix (3) is simply

$$\mathbf{B} = \begin{bmatrix} i_{1,1} & i_{1,2} & \cdots & i_{1,L} \\ i_{2,1} & i_{2,2} & \cdots & i_{2,L} \\ \vdots & & \ddots & \vdots \\ i_{J,1} & i_{J,2} & \cdots & i_{J,L} \end{bmatrix}. \tag{9}$$

III. Graphical Representations of QC LDPC Codes

As is very well known, an LDPC code can either be represented by its parity check matrix $\mathbf{H}$, or equivalently by its Tanner graph [24]. A Tanner graph for an LDPC code is a bi-partite graph consisting of "variable" nodes representing the codeword bits, and "check" nodes representing the parity

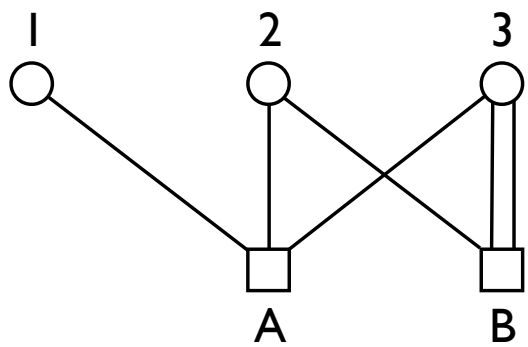

Fig. 1. A simple protograph with three types of variables and two types of checks.

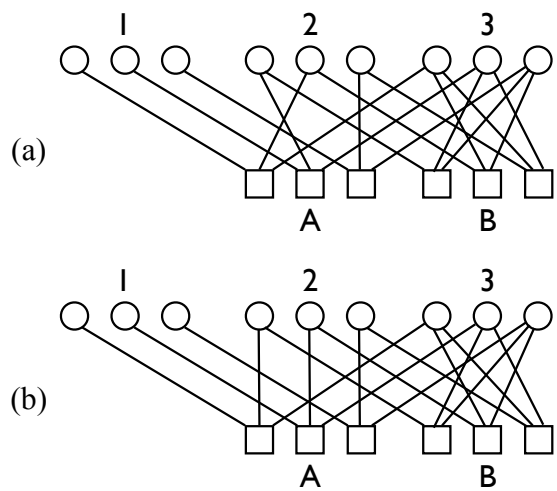

Fig. 2. Two Tanner graphs corresponding to the protograph shown in Fig. 1. The Tanner graph in (a) does not have a quasi-cyclic structure; the one in (b) does, and in fact has the parity check matrix of the QC LDPC code given in Example 1.

checks, where a variable node is connected to a check node by an edge if and only if the corresponding entry in $\mathbf{H}$ is nonzero. The degree of a node is defined as the number of edges incident to that node.

A "protograph," as introduced by Thorpe in [28], is a template that can be used to derive a class of Tanner graphs. Each node in a protograph represents a "type" of node in a Tanner graph. The nodes will all be duplicated p times in the Tanner graph derived from the protograph.

As an example, consider Fig. 1, which shows a simple example of a protograph that has three types of variable nodes and two types of check nodes. This protograph tells us that each check of type A should be connected to one variable of each of the three types, and each check of type B should be connected to one variable of type 2 and two variables of type 3. Similarly, each variable of type 1 should be connected to one check of type A, and so on.

Fig. 2 shows two Tanner graphs derived from the protograph of Fig. 1, with $p = 3$. Note that there are many possible Tanner graphs that one can construct that correspond to a particular protograph, and they need not necessarily have a quasi-cyclic structure. The Tanner graph shown in Fig. 2 (a) is not quasi-cyclic. But it is always easy to construct a quasi-cyclic version of any protograph.

In fact, protographs can equivalently be described by a "connectivity matrices." A connectivity matrix has a number of rows equal to the number of types of checks in the protograph and a number of columns equal to the number of types of variables. Each entry in the connectivity matrix tells you how many edges there are connecting a type of check node to a type of variable node in the protograph. For example, the connectivity matrix C for the protograph in Fig. 1 would be

$$C = \begin{bmatrix} 1 & 1 & 1 \\ 0 & 1 & 2 \end{bmatrix}. \tag{10}$$

To derive a quasi-cyclic parity-check matrix $\mathbf{H}(x)$ from the template specified by a particular protograph, one can simply replace each entry in the equivalent connectivity matrix with a polynomial of weight equal to the entry. We will call this procedure a "direct transformation" of a protograph into a QC LDPC code.

For example, the protograph in Fig. 1 which has the connectivity matrix C given in (10), can be directly transformed into a QC LDPC code with parity check matrix

$$\mathbf{H}(x) = \begin{bmatrix} x^a & x^b & x^c \\ 0 & x^d & x^e + x^f \end{bmatrix}, \tag{11}$$

where a, b, c, d, e and f are integer exponents between 0 and $p-1$, with $e \neq f$.

There are many possible direct transformations of a protograph into a QC LDPC code, depending on what exponents one chooses for the polynomials; one particular direct transformation would convert this protograph into the QC LDPC code with parity check matrix

$$\mathbf{H}(x) = \begin{bmatrix} x^0 & x^0 & x^0 \\ 0 & x^0 & x^1 + x^2 \end{bmatrix}. \tag{12}$$

which would correspond to the Tanner graph shown in Fig. 2 (b) and the code given in Example 1.

IV. Cycles in QC LDPC codes

In this section we discuss how to identify cycles in QC LDPC codes from their parity check matrices. Each check node in the Tanner graph of a code corresponds to a row in its parity check matrix, and each variable node corresponds to a column. A cycle is a path through nodes in the Tanner graph, alternating between check and variable nodes, that starts and ends at the same node. In terms of the code's parity check matrix, a cycle can be visualized as a sequence of alternating vertical horizontal moves through the matrix starting and ending on the same row of the matrix. A vertical move (along a column) corresponds to choosing a second edge connected to the same variable node that will form the next step in the cycle. A horizontal move (along a row) corresponds to choosing two edges connected to the same check node that form part of the path.

For QC LDPC codes there are efficient ways to describe sets of cycles in terms of the code's polynomial parity check matrix. In Section IV-A we introduce the basic ideas

behind identifying cycles in weight-I QC LDPC codes. In Section IV-B, we show how to identify cycles in QC LDPC codes of arbitrary weight. Then, in Section IV-C, we show that higher-weight QC LDPC codes with certain characteristics inevitably have short cycles, and point out that this poses an obstacle to constructing QC LDPC codes with good girth and good waterfall performance—an obstacle that we will overcome by introducing hierarchical QC LDPC codes.

A. Finding cycles in weight-I QC LDPC codes

To make the logic of the section introduction more concrete, consider Fig. 3 which depicts the parity check matrix of a weight-I QC LDPC code with parameters $J = 4$, $L = 9$, and $p = 3$. We focus in on the four 3×3 cyclic shift matrices (represented by the black squares) $\mathbf{I}_a$, $\mathbf{I}_b$, $\mathbf{I}_c$, and $\mathbf{I}_d$. Two choices for the parameters of these four matrices are shown in the sub-figures: $a = 0$, $b = 1$, $c = 2$, and $d = 1$ on the left, and $a = 0$, $b = c = d = 1$ on the right.

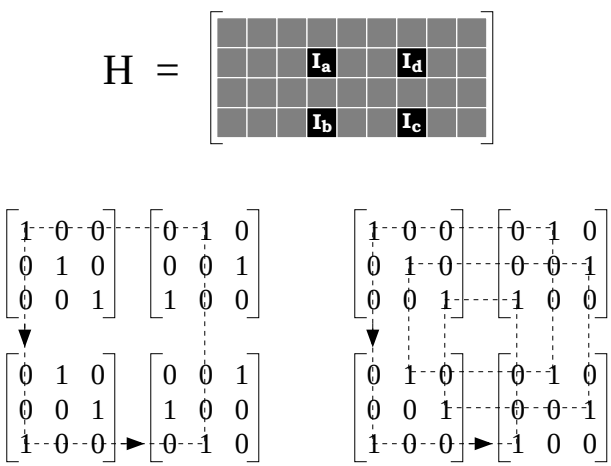

Fig. 3. A parity-check matrix and four 3×3 circulant permutation matrices ($\mathbf{I}_a$, $\mathbf{I}_b$, $\mathbf{I}_c$ and $\mathbf{I}_d$) selected from it. One set of parameters (lower left, $a = 0$, $b = 1$, $c = 2$, $d = 1$) results in a cycle of length four. An alternate set (lower right, $a = 0$, $b = c = d = 1$) results in a cycle of length twelve.

Consider any path through the base matrix of the code. Due to the way we generate the code's parity check matrix by replacement of each base matrix entry by a $p \times p$ circulant matrix, a path through the base matrix corresponds to p paths through the Tanner graph of the code. For any of these paths through the Tanner graph to be a cycle, the path must end at the same variable node from which it started. For this to happen in a weight-I QC LDPC code, it is necessary for the path through the base matrix to form a cycle, without passing through any all-zeros matrices. But this is not sufficient, since each cyclic shift matrix corresponds to p parity and p variable nodes. The path could end up at a different variable node in the same cyclic shift matrix and not complete a cycle.

The necessary and sufficient condition for cycles to exist is that when the path through the base matrix returns to the starting entry, it returns to the same column of the cyclic shift matrix from which it started. In the example of Fig. 3, consider the path through the base matrix starting at the entry labeled a, then progressing through the entries labeled b, c, and d in turn, and terminating at the entry labeled a. The corresponding path through the parity check matrix, with parameter settings $a = 0$, $b = 1$, $c = 2$, $d = 1$, is depicted in the left-hand example of Fig. 3 and results in a cycle of length four. However, with the slightly different choice of circulant shifts of the right-hand example, a return to the same column of the cyclic shift matrix occurs only after two more passes around the base matrix and an overall cycle of length 12.

We now specify the conditions on the $\{a, b, c, d\}$ that result in a cycle (in fact in a set of p cycles). Calculate an alternating sum of the shift indices associated with neighboring permutation matrices along a given path, where every odd shift index is subtracted rather than added. For example, consider the left-hand path of Fig. 3. The sum is $-a + b - c + d$. Each difference between neighboring shift indices in the sum corresponds to the shift in what column (i.e., what variable node) of the cyclic permutation matrices the path passes through. Only if the differences sum to zero (mod-p) at the end of the path will the path return to the same variable node in the starting permutation matrix, thereby forming a cycle. For the example of Fig. 3, the condition for a length-four cycle to exist is:

$$(-a + b - c + d) \mod p = 0, \tag{13}$$

which is satisfied for $a = 0$, $b = 1$, $c = 2$, $d = 1$, but is not satisfied by $a = 0$, $b = c = d = 1$.

B. Finding cycles in higher-weight QC LDPC codes

We now take a step up in complexity from weight-I QC LDPC codes, and consider the more involved example of the weight-II code of Example 1 from Section II. Recall that this code is defined by the 2×3 polynomial parity-check matrix

$$\mathbf{H}(x) = \begin{bmatrix} x^0 & x^0 & x^0 \\ 0 & x^0 & x^1 + x^2 \end{bmatrix}. \tag{14}$$

In terms of the coefficients $c_s[j, l]$ defined by $h_{j,l}(x) = \sum_{s=0}^{p-1} c_s[j, l]x^s$ (see (5)), we have that all the coefficients $c_s[j, l]$ are equal to zero except for $c_s[j, l] = 1$ when $s = 0$ and (j, l) equals $(1, 1)$, $(1, 2)$, $(1, 3)$ or $(2, 2)$, and for $s = 1$ or $s = 2$, when $(j, l) = (2, 3)$.

Now, consider the following ordered series:

$$\mathcal{O} = \{(1, 2), (2, 2), (2, 3), (2, 3), (2, 3), (1, 3)\} \tag{15}$$

where each pair (j, l) in $\mathcal{O}$ satisfies $1 \leq j \leq J = 2$ and $1 \leq l \leq L = 3$. This ordered series specifies a sequence of rectilinear moves through $\mathbf{H}(x)$. These moves are analogous to those in Fig. 3 with the important distinction that if the polynomial in position (j, l) has more than one term (that is, $c_s[j, l]$ is non-zero for more than one value of s), then the next pair in the sequence *can* be the same. For example, in (15) the third, fourth, and fifth pairs are identical.

To specify a candidate cycle through the Tanner graph, we associate a coefficient index s with each pair (j, l) in $\mathcal{O}$, such that $c_s[j, l] \neq 0$. We denote this series of coefficient indices by $\mathcal{S}$. To ensure that each step in the series corresponds to traversing a distinct edge in the Tanner graph we require the following of neighboring pairs (j^-, l^-) and (j^+, l^+) in $\mathcal{O}$ and the corresponding neighboring coefficient indices s^- and s^+

in $\mathcal{S}$: if $(j^-, l^-) = (j^+, l^+)$, then the corresponding indices $s^- \neq s^+$.

The candidate cycle will actually be a cycle if the alternating sum of coefficient indices in $\mathcal{S}$ modulo p equals zero.

In our example, consider the two following choices for the respective (ordered) sets of coefficient indices:

$$\mathcal{S}_a = \{0, 0, 2, 1, 2, 0\} \tag{16}$$

$$\mathcal{S}_b = \{0, 0, 1, 2, 1, 0\}. \tag{17}$$

Each of these choices corresponds to a cycle of length-6 through the Tanner graph of the code, illustrated in Fig. 4. The alternating sums modulo-3 can be verified to be equal to zero. Respectively these sums are:

$$\begin{aligned}(-0+0-2+1-2+0) \bmod 3 &= (-3) \bmod 3 &= 0\\ (-0+0-1+2-1+0) \bmod 3 &= \quad (0) \bmod 3 &= 0.\end{aligned}$$

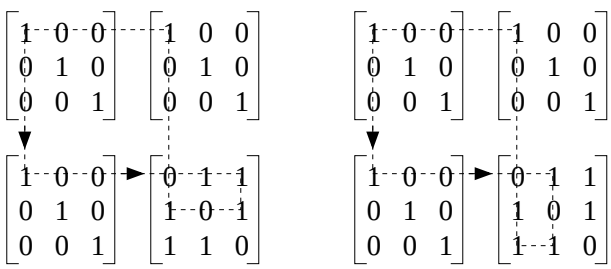

Fig. 4. The two length-6 cycles through the Tanner graph of the weight-II QC LDPC code of Example 1.

C. Inevitable cycles in higher-weight QC LDPC codes

Unfortunately, the logic described in the previous section implies that higher-weight QC LDPC codes will inevitably contain short cycles. Let us begin with a straightforward and important theorem, already proven by Smarandache and Vontobel [29], that states that any weight-III QC LDPC code will inevitably contain cycles of length six. To prove this, we note that we can choose a cycle with an ordered series

$$\mathcal{O} = \{(j, l), (j, l), (j, l), (j, l), (j, l), (j, l)\} \tag{18}$$

of six identical entries such that each pair (j, l) gives the row j and column l of the same weight-III polynomial in the parity check matrix $\mathbf{H}(x)$. Suppose, without loss of generality, that the weight-III polynomial has the form $x^a + x^b + x^c$. Then we can choose for the cycle an ordered set of coefficient indices $\mathcal{S} = \{a, b, c, a, b, c\}$ and we will find that

$$(-a + b - c + a - b + c) \mod p = 0, \tag{19}$$

automatically for any p.

Smarandache and Vontobel also proved (see their Theorem 17) that if the parity check matrix $\mathbf{H}(x)$ of a weight-II QC LDPC code contains two weight-two polynomials in the same row or the same column, that code will inevitably have eight-cycles. Again, this is easy to verify using our approach. Suppose for example that the two weight-2 polynomials are in the same row j and two different columns l_1 and l_2, and that the polynomial at (j, l_1) is $x^a + x^b$, while the polynomial at (j, l_2) is $x^c + x^d$. We can find an eight-cycle that has the ordered series

$$\mathcal{O} = \{(j, l_1), (j, l_1), (j, l_2), (j, l_2), (j, l_1), (j, l_1), (j, l_2), (j, l_2)\} \tag{20}$$

and the ordered set of indices

$$\mathcal{S} = \{a, b, c, d, b, a, d, c\} \tag{21}$$

so that we find

$$(-a + b - c + d - b + a - d + c) \mod p = 0, \tag{22}$$

regardless of the value of p.

These inevitable six-cycles and eight-cycles at first sight appear to put serious limitations on what protographs can be converted into quasi-cyclic codes with high girth. We noted in Section III that a protograph could be equivalently described using a connectivity matrix, and that a parity check matrix of a quasi-cyclic code could be derived from the connectivity matrix by the "direct transformation" which replaces the entries of the connectivity matrix by polynomials with weight equal to the entry. We now see that if, for example, the protograph has a type of variable that is connected to a type of check by three edges, a direct transformation will inevitably lead to six-cycles in the obtained QC LDPC code.

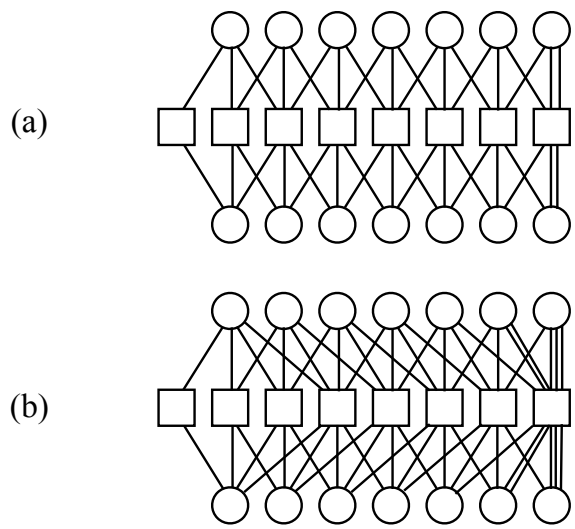

Fig. 5. Protographs for "one-sided" spatially-coupled codes as described in [21]. The QC LDPC code constructed by a direct transformation from the protograph in (a) will inevitably have eight-cycles because the check type at the right end is connected by two edges to the bit types above and below it. The QC LDPC code constructed by a direct transformation from the protograph in (b) will inevitably have six-cycles because there exist bits types at the right end that are connected by three edges to a check type.

Furthermore, protographs with higher edge weights are not particularly exotic. Consider for example the protographs shown in Fig. 5, which are the protographs for "one-sided" spatially coupled codes as described by Kudekar et al. [21]. Notice that if we used a direct transformation to convert these protographs into QC LDPC codes, the QC LDPC codes corresponding to the protographs in Fig. 5 (a) would inevitably have eight-cycles, while those in Fig. 5 (b) would inevitably have six-cycles.

It turns out that there do exist techniques to construct QC LDPC codes corresponding to these protographs that have girth of 10 or greater, but to understand these techniques, we need to make an apparent detour, and introduce *hierarchical* QC LDPC codes.

V. Hierarchical QC LDPC codes

We now introduce *hierarchical* QC LDPC codes (HQC LDPC codes), motivated by the fact that these codes will ultimately enable us to solve the problem of constructing QC LDPC codes corresponding to protographs with multiple edges between check and variable types, without creating inevitable short cycles in the Tanner graph of the code. However, because these codes may eventually have other applications, we present their construction in a form that is actually more general than we will need for the purpose of eliminating inevitable short cycles.

A hierarchical QC LDPC code is formed from "levels" that each have a quasi-cyclic structure. The structure can be specified in two equivalent, complementary forms: one in terms of the polynomial parity check matrices of these codes, and another in terms of the "tree structure" of these codes.

A. Parity check matrices of hierarchical QC LDPC codes

Before fully defining HQC LDPC codes formally, it is easier to have a concrete example in mind.

Example 2: Consider the polynomial parity check matrix specified in equation (23) with $p = 8$. Because the highest weight of any of the polynomial entries is 2, (e.g., $h_{1,3}(x) = x^1 + x^7$), and because there are 12 columns in the matrix, this is a length-96 weight-II QC LDPC code.

But note that this parity check matrix has additional structure which makes it a *hierarchical* QC LDPC code. In particular, in this example, each 3×3 sub-matrix of polynomials in (23) has a circulant structure, as do both the left-hand and right-hand sets of 2×2 sub-matrices of 3×3 sub-matrices.

Just as we use polynomials in the dummy variable x to represent the underlying circulant sub-matrices in a standard QC LDPC code, we can use a bi-variate polynomial in the two dummy variables x and y to represent both the circulant matrices represented by the variable x in (23) as well as the circulant arrangements within each 3×3 sub-matrix of polynomials in x. The latter circulant structure we represent using the dummy variable y. We can further represent the 2×2 circulant structure of 3×3 circulant sub-matrices using the additional dummy variable z.

Thus, in equation (24) we contract the 6×12 polynomial parity check matrix $\mathbf{H}(x)$ of equation (23) into the 2×4 bi-variate polynomial parity check matrix $\mathbf{H}(x, y)$. As we use this example to illustrate many aspects of the ensuing discussion, please make sure you think about and understand why, e.g., the upper right 3×3 sub-matrix in $\mathbf{H}(x)$ is represented by the bi-variate polynomial $x^2 + x^5 y + y^2$ in $\mathbf{H}(x, y)$.

We can repeat the process to contract $\mathbf{H}(x, y)$ into the 1×2 tri-variate polynomial parity check matrix $\mathbf{H}(x, y, z)$ given in equation (25).

Each of the three contractions of the parity check matrix of this code into the polynomial parity check matrices represented by (23), (24), and (25), corresponds to a "level" in the hierarchy of this 3-level HQC LDPC code. ■

In this example, we started with a polynomial parity check matrix $\mathbf{H}(x)$, and contracted it first to $\mathbf{H}(x, y)$ and then to $\mathbf{H}(x, y, z)$. When constructing an HQC LDPC code, it is often more natural to go in the other direction—expanding a matrix like $\mathbf{H}(x, y, z)$ into $\mathbf{H}(x)$ and then ultimately into the full parity check matrix whose entries are ones and zeroes. To expand a polynomial matrix, we obviously need to know the size of the circulant matrices at every level.

We now present a formal definition of the family of K-level hierarchical QC LDPC codes which generalizes our example.

Definition 1: A hierarchical QC LDPC code with K levels is defined by a $J_{[K]} \times L_{[K]}$ multi-variate polynomial parity check matrix $\mathbf{H}(\cdot)$ in K variables. The entry in the jth row and lth column of $\mathbf{H}(\cdot)$, $1 \le j \le J_{[K]}$, $1 \le l \le L_{[K]}$ is a K-variate polynomial $h_{j,l}(\cdot, \ldots, \cdot)$ over the K variables, $x_{[1]}, \ldots, x_{[K]}$. The maximum exponent of any of these polynomials in $x_{[k]}$, $1 \le k \le K$, is $p_{[k]} - 1$. The coefficient associated with the term $x_{[1]}^{s_1} \cdot x_{[2]}^{s_2} \cdots x_{[K]}^{s_K}$ where $0 \le s_k \le p_{[k]} - 1$ for all k is $c_{s_1,\ldots,s_K}[j, l]$. With these definitions we defined the code by the $J_{[K]} \cdot L_{[K]}$ polynomials

$$h_{j,l}(x_{[1]}, \ldots, x_{[K]}) = \sum_{s_K=0}^{p_{[K]}-1} \cdots \sum_{s_1=0}^{p_{[1]}-1} c_{s_1,\ldots,s_K}[j, l] \left(\prod_{k=1}^{K} x_{[k]}^{s_k} \right). \quad (26)$$

The parity check matrix of such a code is obtained by replacing each of the $J_{[K]} \cdot L_{[K]}$ entries of $\mathbf{H}(x_{[1]}, \ldots, x_{[K]})$ with the sub-matrix

$$\sum_{s_K=0}^{p_{[K]}-1} \cdots \sum_{s_1=0}^{p_{[1]}-1} c_{s_1,\ldots s_K}[j, l] \left(\mathbf{I}_{1,p_{[K]}}^{s_K} \otimes \ldots \otimes \mathbf{I}_{1,p_{[1]}}^{s_1} \right), \quad (27)$$

where $\otimes$ denotes a Kronecker product. Defining the recursive relations $J_{[k-1]} = J_{[k]} \cdot p_{[k]}$ and $L_{[k-1]} = L_{[k]} \cdot p_{[k]}$, where $0 \le k \le K$, the parity check matrix thus constructed has $J_{[0]} = J_{[K]} \cdot \prod_{k=1}^{K} p_{[k]}$ rows and $L_{[0]} = L_{[K]} \cdot \prod_{k=1}^{K} p_{[k]}$ columns. ■

While the definition of HQC LDPC codes holds more generally for codes defined in fields other than GF(2), in this paper we exclusively consider *binary* QC LDPC codes wherein all $c_{s_1,\ldots,s_K}[j, l]$ are binary. We return to our previous example to illustrate our definitions.

Example 2 (continued): The code of this example is a three-level HQC LDPC code. To cast this example into the language of Definition 1 we first identify x with $x_{[1]}$, y with $x_{[2]}$, and z with $x_{[3]}$.

In this example $p_{[1]} = 8$, $p_{[2]} = 3$, $p_{[3]} = 2$. Therefore, $J_{[3]} = 1$, $L_{[3]} = 2$; $J_{[2]} = 2$, $L_{[2]} = 4$; $J_{[1]} = 6$, $L_{[1]} = 12$; and $J_{[0]} = 48$, $L_{[0]} = 96$.

$$\mathbf{H}(x) = \left[\begin{array}{ccc|ccc|ccc|ccc} x^2 & 0 & x^1+x^7 & 0 & x^7 & 1+x^6 & 0 & 0 & 0 & x^2 & x^5 & 1 \\ x^1+x^7 & x^2 & 0 & 1+x^6 & 0 & x^7 & 0 & 0 & 0 & 1 & x^2 & x^5 \\ 0 & x^1+x^7 & x^2 & x^7 & 1+x^6 & 0 & 0 & 0 & 0 & x^5 & 1 & x^2 \\ \hline 0 & x^7 & 1+x^6 & x^2 & 0 & x^1+x^7 & x^2 & x^5 & 1 & 0 & 0 & 0 \\ 1+x^6 & 0 & x^7 & x^1+x^7 & x^2 & 0 & 1 & x^2 & x^5 & 0 & 0 & 0 \\ x^7 & 1+x^6 & 0 & 0 & x^1+x^7 & x^2 & x^5 & 1 & x^2 & 0 & 0 & 0 \end{array}\right] \tag{23}$$

$$\mathbf{H}(x,y) = \left[\begin{array}{c|c|c|c} x^2+(x+x^7)y^2 & x^7y+(1+x^6)y^2 & 0 & x^2+x^5y+y^2 \\ \hline x^7y+(1+x^6)y^2 & x^2+(x+x^7)y^2 & x^2+x^5y+y^2 & 0 \end{array}\right] \tag{24}$$

$$\mathbf{H}(x,y,z) = \left[x^2+(x+x^7)y^2+(x^7y+(1+x^6)y^2)z \;\middle|\; (x^2+x^5y+y^2)z\right] \tag{25}$$

We can rewrite, e.g., the term $h_{1,1}(x,y,z)$ of (25) as

$$\begin{aligned} &h_{1,1}(x_{[1]},x_{[2]},x_{[3]}) \\ &= x_{[1]}^2 + \left(x_{[1]}+x_{[1]}^7\right)x_{[2]}^2 + \left(x_{[1]}^7x_{[2]} + \left(1+x_{[1]}^6\right)x_{[2]}^2\right)x_{[3]} \\ &= \sum_{s_3=0}^{1}\sum_{s_2=0}^{2}\sum_{s_1=0}^{7} c_{s_1,s_2,s_3}[1,1]x_{[1]}^{s_1}x_{[2]}^{s_2}x_{[3]}^{s_3}, \end{aligned}$$

where all coefficients $c_{s_1,s_2,s_3}[1,1]$ are zero except for $c_{2,0,0}[1,1] = c_{1,2,0}[1,1] = c_{7,2,0}[1,1] = c_{7,1,1}[1,1] = c_{0,2,1}[1,1] = c_{6,2,1}[1,1] = 1$. ■

Rather than expanding $\mathbf{H}(x_{[1]},\ldots,x_{[K]})$ into a full parity check matrix as in (27), one often wants to generate the form given in equation (4) of the polynomial parity check matrix $\mathbf{H}(x_{[1]})$ of a QC LDPC code *in one variable*. To do this we use the construction of (27) for all but the first level. We replace each $h_{j,l}(x_{[1]},\ldots,x_{[K]})$ with the polynomial matrix in $x_{[1]}$

$$\sum_{s_K=0}^{p_{[K]}-1}\cdots\sum_{s_1=0}^{p_{[1]}-1} c_{s_1,\ldots,s_K}[j,l]\left(\mathbf{I}_{1,p_{[K]}}^{s_K}\otimes\cdots\otimes\mathbf{I}_{1,p_{[2]}}^{s_2}\right)x_{[1]}^{s_1}. \tag{28}$$

The matrix $\mathbf{H}(x_{[1]})$ is of size $J_{[1]}\times L_{[1]}$. We return once more to our example to illustrate this idea.

Example 2 (continued): Consider the final term of $h_{1,1}(x_{[1]},x_{[2]},x_{[3]})$, namely $(1+x_{[1]}^6)x_{[2]}^2x_{[3]}$, corresponding to the non-zero coefficients $c_{0,2,1}[1,1]$ and $c_{6,2,1}[1,1]$. According to equation (28), The contribution of this term to $\mathbf{H}(x_{[1]})$ is

$$c_{0,2,1}[1,1]\left(\mathbf{I}_{1,2}\otimes\mathbf{I}_{1,3}^2\right)x_{[1]}^0 + c_{6,2,1}[1,1]\left(\mathbf{I}_{1,2}\otimes\mathbf{I}_{1,3}^2\right)x_{[1]}^6,$$

where $x_{[1]}^0 = 1$, $c_{1,2,1}[1,1] = c_{6,2,1}[1,1] = 1$ and

$$\mathbf{I}_{1,2}\otimes\mathbf{I}_{1,3}^2 = \begin{bmatrix} 0&0&0&0&0&1 \\ 0&0&0&1&0&0 \\ 0&0&0&0&1&0 \\ 0&0&1&0&0&0 \\ 1&0&0&0&0&0 \\ 0&1&0&0&0&0 \end{bmatrix}. \tag{29}$$

Referring back to the left-hand six-by-six sub-matrix of $\mathbf{H}(x,y,z)$ in (23) we can confirm the correctness of this pattern, as a $1+x^6$ term appears in each of the non-zero entries in the matrix of equation (29).

Having worked this example, we can now see how the form of equation (28) nicely reveals the structure of HQC LDPC codes. Each row and each column of the matrix $\mathbf{I}_{1,p_{[K]}}^{s_K}\otimes\cdots\otimes\mathbf{I}_{1,p_{[2]}}^{s_2}$ has exactly one non-zero element. If the coefficient $c_{s_1,s_2,\ldots,s_K}[j,l]$ is non-zero, the permutation matrix $\mathbf{I}_{1,p_{[1]}}^{s_1}$ (equivalent to the term $x_{[1]}^{i_1}$) is added at the location of each of these non-zero elements. ■

Finally, we note that the polynomial parity check matrix of a K-level HQC LDPC code can more generally be expanded into a parity check polynomial $\mathbf{H}(x_{[1]},\ldots,x_{[\tilde{K}]})$ in $\tilde{K}$ variables where $\tilde{K} < K$. We call this the "level-$\tilde{K}$" polynomial parity check matrix of the code. We derive this matrix by expanding out all but the last $\tilde{K}$ levels. Replace each $h_{j,l}(x_{[1]},\ldots,x_{[K]})$ with the polynomial matrix in $x_{[1]},\ldots,x_{[\tilde{K}]}$

$$\sum_{s_K=0}^{p_{[K]}-1}\cdots\sum_{s_1=0}^{p_{[1]}-1} c_{s_1,\ldots,s_K}[j,l]\left(\mathbf{I}_{1,p_{[K]}}^{s_K}\otimes\cdots\otimes\mathbf{I}_{1,p_{[\tilde{K}+1]}}^{s_{\tilde{K}+1}}\right)\prod_{k=1}^{\tilde{K}} x_{[k]}^{s_k}.$$

The matrix $\mathbf{H}(x_{[1]},\ldots,x_{[\tilde{K}]})$ has dimension $J_{[\tilde{K}]}\times L_{[\tilde{K}]}$.

B. Tree structure of HQC LDPC codes

We now show that we can alternately describe an HQC LDPC code by specifying the code's *tree structure*. The tree structure of any HQC LDPC code is defined by a matrix of *labeled trees*, defined in Definition 2. These labeled trees quite naturally reveal the hierarchical structure of the code. We will show that there is a complete equivalence between Definition 1 of the last section and the definitions of this section. We can start with Definition 1 and easily find the unique set of labeled trees that specify the code or, starting from a tree structure, find the unique HQC LDPC code that has that structure.

The reasons to consider this alternate description are two-fold. First, the representations of this section help reveal the hierarchical structure within the algebraic description of Definition 1. Second, we will use *unlabeled* trees to define a family of HQC LDPC codes, and then will want to search for a labeling within that family to optimize girth.

The basic observation that motivates the following definitions is that the non-zero terms of the polynomials that define any HQC LDPC code have a *hierarchical clustering* that can be represented by a labeled tree. We formally define such a *labeled tree* as follows.

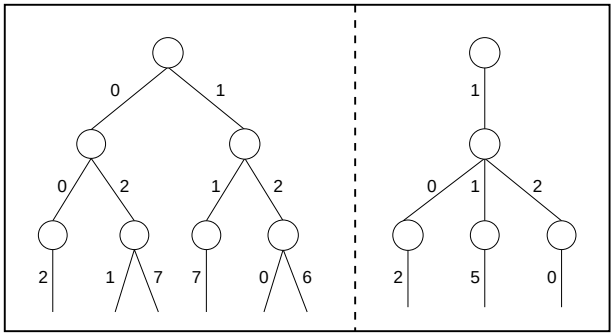

Fig. 6. Example of the tree structure of a family of three-level hierarchical QC LDPC codes. The left-hand tree is $\mathbf{T}_{1,1}$, the right-hand tree is $\mathbf{T}_{1,2}$.

Definition 2: A *labeled tree* $\mathbf{T}$, corresponding to an entry in the $J_{[K]} \times L_{[K]}$ multi-variate polynomial parity check matrix $\mathbf{H}(\cdot)$ in K variables defining a K-level HQC LDPC code, is a depth-K tree. The root node of the tree is the single node at the top (Kth) level. Each node at level k, $1 \leq k \leq K$, has a number of edges connecting it to nodes in the next level down. The number of edges must be an integer in the set $\{1, \ldots, p_{[k]} - 1\}$.

Each edge below a node at level k is labeled by an integer in the set $\{0, 1, \ldots, p_{[k]} - 1\}$. Edges are termed "siblings" if they share the same parent (i.e., are connected to the same node at the higher level). The edge labels of sibling nodes are constrained to be distinct. We refer to the edges below the lowest nodes as "leaves." We will have need to index the edges at each level of the tree, so use $|\mathbf{T}[k]|$ to denote the number of edges in $\mathbf{T}$ at level k, i.e., the set of edges that have a parent node at level k. ■

The code discussed in Example 2 is characterized by the matrix of two labeled trees shown in Figure 6. The left-hand tree characterizes the polynomial $h_{1,1}(x, y, z)$ and the right-hand tree characterizes $h_{1,2}(x, y, z)$, both specified in (25). Before understanding how these labeled trees relate to the structure of the code we note that for this code $p_{[1]} = 8$, $p_{[2]} = 3$ and $p_{[3]} = 2$, and node and edge labels are within the ranges specified by Definition 2.

The next definition relates these trees to the structure of the code.

Definition 3: The *tree structure* of a K-level HQC LDPC code is specified by a matrix of labeled trees $\mathcal{T} = \{\mathbf{T}_{j,l}\}$, $1 \leq j \leq J_{[K]}$, $1 \leq l \leq L_{[K]}$. To each leaf of $\mathbf{T}_{j,l}$ we associate a single non-zero coefficient $c_{s_1,\ldots,s_K}[j, l]$ in a one-to-one manner. If the edge labels on the unique path from the leaf to the root node are $e_1, \ldots, e_K$ then the non-zero coefficient associated with the leaf is $c_{e_1,\ldots,e_K}[j, l] = 1$.

In certain cases (corresponding to all-zero polynomials) we want to define a "null" tree. This is a non-existent tree (and therefore no edges exist so all coefficients are zero). We use the special symbol $*$ to denote the null tree. E.g., $\mathbf{T}_{2,1} = *$ for the code specified in (8). ■

The number of edges below level K of tree $\mathbf{T}_{j,l}$ indicates the number of *distinct* powers of $x_{[K]}$ that appear in $h_{j,l}(x_{[1]}, \ldots, x_{[K]})$. Each node at level $K - 1$ corresponds to one of these terms. The number of edges below each of the nodes at level $K - 1$ indicates the number of distinct powers of $x_{[K-1]}$ associated with that term, and so on down the tree. The number of leaves in the tree equals the number of terms in the polynomial $h_{j,l}(x_{[1]}, \ldots, x_{[K]})$. The maximum number of leaves below any of the lowest level nodes (across all (j, l) pairs) tells us the weight of the code (weight-I, weight-II, etc.). The edge labels indicate the exponents that define the non-zero polynomials.

We can also define a more fine-grained "weight at level k" of a hierarchical code by the maximum number of edges below any of the nodes at level k. A hierarchical code can have different weights at different levels; for example, the code from Example 2 with tree structure shown in Figure 6 is weight-II at level 1 (the lowest level), weight-III at level 2, and weight-II at level 3.

The following lemma shows that the two ways of conceptualizing HQC LDPC codes (Definition 1 or Definition 3) are equivalent.

Lemma 1: There is a one-to-one mapping between any HQC LDPC codes as defined in Definition 1 and a tree structure, as defined in Definition 3. ■

Proof: We first show that any HQC LDPC code has a tree structure that can be read off from the form of the polynomials that make up its polynomial parity-check matrix. To see this, start with Definition 1. The $J_{[K]}L_{[K]}$ polynomials each define one labeled tree. Using the distributive law, we cluster the terms of each polynomial as much as possible (i.e., into the least-factored form of the polynomial). The resulting (hierarchical) clustering of terms specifies a labeled tree.

Conversely, we now show that any set of labeled trees can be uniquely mapped to an HQC LDPC code. Starting with the set of labeled trees, we first solve for the non-zero coefficients by concatenating edge labels on all paths from distinct leaves to the root. Using the resulting set of non-zero coefficients in Definition 1 specifies the code. ■

Example 3: To understand the structure on the code imposed by the tree topology, consider again the two trees shown in Fig. 6. By "tree topology," we simply mean the unlabeled versions of these trees. Each unlabeled tree has three levels and there are two of them. From this we infer that these unlabeled trees specify a family of three-level HQC LDPC codes where $J_{[3]} = 1$ and $L_{[3]} = 2$. Since the maximum number of leaves below a node at the first level is two, these trees specifies a family of weight-II QC LDPC codes.

Now focus on the left-hand tree. To simplify notation, let us again use x for $x_{[1]}$, y for $x_{[2]}$, and z for $x_{[3]}$. Since the number of leaves is six, we deduce that $h_{1,1}(x, y, z)$ has six terms, i.e.,

$$h_{1,1}(x, y, z) = \sum_{i=1}^{6} x^{a_i} y^{b_i} z^{c_i},$$

where, using $p_{[1]} = 8$, $p_{[2]} = 3$ and $p_{[3]} = 2$, $0 \leq a_i \leq 7$, $0 \leq b_i \leq 2$, and $0 \leq c_i \leq 1$. Since the root node has two edges, we deduce that these six terms are clustered into two sets of polynomials defined by $c_1 = c_2 = c_3$ and $c_4 = c_5 = c_6$, thus

$$(x^{a_1} y^{b_1} + x^{a_2} y^{b_2} + x^{a_3} y^{b_3}) z^{c_1} + (x^{a_4} y^{b_4} + x^{a_5} y^{b_5} + x^{a_6} y^{b_6}) z^{c_4}.$$

where $c_1 \neq c_4$. (Since c_1 and c_4 are both binary, without loss of generality we could set $c_1 = 0$ and $c_4 = 1$ at this point.) Now from the second level in the tree we deduce that the terms in z^{c_1} group into two sets, one with two terms so $b_2 = b_3$. The same happens with the terms in z^{c_4} where $b_5 = b_6$. This tells us that the polynomials compatible with this tree have the form

$$(x^{a_1}y^{b_1} + (x^{a_2} + x^{a_3})y^{b_2})z^{c_1} + (x^{a_4}y^{b_4} + (x^{a_5} + x^{a_6})y^{b_5})z^{c_4}, \tag{30}$$

where $c_1 \neq c_4$, $b_1 \neq b_2$, $b_4 \neq b_5$, $a_2 \neq a_3$ and $a_5 \neq a_6$ (but, e.g., $b_1 = b_4$ is allowed). ■

One can now see that the topology of the unlabeled version of the trees of Fig. 6 specifies a family of HQC LDPC codes, of which the code considered in Example 2, and specified in (25), is one member. As the last example illustrates, many degrees of freedom remain within the specified family. In particular these are the choice of the a_i, b_i and c_i in (30), subject to the constraints $c_1 \neq c_4, b_1 \neq b_2, \ldots, a_5 \neq a_6$. In the algorithms of Section VII, were we maximize the girth of our codes, we search among these degrees of freedom, keeping the code's unlabeled tree structure fixed.

Finally, we note that in a non-hierarchical weight-I QC LDPC code, the trees in $\mathcal{T}$ are quite simple. Each is either the null tree or a tree that consists of a single root node with a single leaf below it. No leaf has a sibling so no constraints are placed on the choice of edge labels.

VI. Cycles in Hierarchical QC LDPC codes

We now state the necessary and sufficient conditions on the polynomial parity check matrix of an HQC LDPC code for that code to have a cycle of a particular length. These conditions generalize those specified by Fossorier in [27] for weight-I QC LDPC codes. They are also formalizations and generalizations of the examples we gave for higher-weight QC LDPC codes in Section IV-B; the main important new requirement compared to those examples is that our cycles now need to be cycles at all levels of the hierarchy simultaneously.

A. Finding cycles in HQC LDPC codes

We start by defining a path (or "candidate cycle") through a K-variate polynomial parity check matrix.

Definition 4: A length-2Λ path $\mathcal{P}$ through a K-variate $J_{[K]} \times L_{[K]}$ polynomial parity check matrix matrix $\mathbf{H}(\cdot)$ of an HQC LDPC code is specified by two sets, $\mathcal{O}$ and $\mathcal{S}$, i.e., $\mathcal{P} = \{\mathcal{O}, \mathcal{S}\}$.

The first set $\mathcal{O}$ is an ordered series

$$\mathcal{O} = \{(j_1, l_1), (j_2, l_2), (j_3, l_3), \cdots, (j_{2\Lambda}, l_{2\Lambda})\} \tag{31}$$

such that

(i) $1 \leq j_t \leq J_{[K]}$ and $1 \leq l_t \leq L_{[K]}$ for all t, $1 \leq t \leq 2\Lambda$,
(ii) $j_{2\Lambda} = j_1$,
(iii) $j_t = j_{t+1}$ for $t \in \mathbb{Z}_{\text{even}}$ (even integers),
(iv) $l_t = l_{t+1}$ for $t \in \mathbb{Z}_{\text{odd}}$ (odd integers),
(v) $|\mathcal{C}[j,l]| > 0$ for all $(j,l) \in \mathcal{O}$, where the set $\mathcal{C}[j,l]$ is defined to be the set of coefficients in the polynomial in the jth row and lth column of $\mathbf{H}(\cdot)$ that are non-zero:

$$\mathcal{C}[j,l] = \{c_{s_1,\ldots,s_K}[j,l] : c_{s_1,\ldots,s_K}[j,l] \neq 0\}. \tag{32}$$

The second set $\mathcal{S}$ is a set of length-K vectors of coefficient indices

$$\mathcal{S} = \{\mathbf{s}[j_1, l_1], \mathbf{s}[j_2, l_2], \ldots, \mathbf{s}[j_{2\Lambda}, l_{2\Lambda}]\} \tag{33}$$

where, as implied by the notation, $(j_t, l_t) \in \mathcal{O}$ for all $t, 1 \leq t \leq 2\Lambda$, and $|\mathcal{S}| = |\mathcal{O}|$. Furthermore,

(vi) the kth coordinate $s_k[j,l]$ of $\mathbf{s}[j,l]$ satisfies $0 \leq s_k[j,l] \leq p_{[k]} - 1$ for all $(j,l) \in \mathcal{O}$,
(vii) $c_{\mathbf{s}[j,l]}[j,l] \in \mathcal{C}[j,l]$ for all $(j,l) \in \mathcal{O}$, where $c_{\mathbf{s}[j,l]}[j,l]$ is a compact notation for $c_{s_1,\ldots,s_K}[j,l]$.
(viii) if consecutive elements of $\mathcal{O}$ are identical, i.e., $(j_t, l_t) = (j_{t+1}, l_{t+1})$ for some t, $1 \leq t \leq 2\Lambda$, then $\mathbf{s}[j_t, l_t] \neq \mathbf{s}[j_{t+1}, l_{t+1}]$.

The above definition generalizes those definitions made and used in Sections IV-A and IV-C for finding cycles in higher-weight QC LDPC codes. In those sections the ordered set $\mathcal{O}$ and coefficient indices $\mathcal{S}$ were first introduced and their characteristics were described. For examples of $\mathcal{O}$ see (15), (18), and (20), and for those of $\mathcal{S}$ see (16), (17), and (21). These examples illustrate the reasoning behind criteria (1)–(8) in the definition above.

We now state the conditions for a length-2Λ path $\mathcal{P} = \{\mathcal{O}, \mathcal{S}\}$ actually to correspond to length-2Λ cycles in the Tanner graph. Consider the following alternating sums, one for each k, $1 \leq k \leq K$:

$$\Sigma[k] = \sum_{t=1}^{2\Lambda} (-1)^t s_k[j_t, l_t]. \tag{34}$$

As reflected in the following theorem, these sums are the generalization of the sum in (13) to HQC LDPC codes.

Theorem 1: A path length-2Λ path $\mathcal{P} = \{\mathcal{O}, \mathcal{S}\}$ through the K-variate $J_{[K]} \times L_{[K]}$ polynomial parity check matrix matrix $\mathbf{H}(\cdot)$ correspond to length-2Λ cycles in the Tanner graph if and only if *for every* k, $1 \leq k \leq K$,

$$\Sigma[k] \bmod \ p_{[k]} = 0. \tag{35}$$

■

Proof: First consider the case where $K = 1$, i.e., a *non-hierarchical* QC LDPC code for which (35) corresponds to Fossorier's condition. Recall the logic of Section IV. In this setting if condition (35) is *not* satisfied, then the column of the polynomial parity check matrix from which the path originates is distinct from the one on which the path terminates. Since distinct columns of the polynomial parity check matrix correspond to distinct sets of variable nodes in the Tanner graph, this means that if (35) is not satisfied the path does not correspond to a set of cycles.

In general, what condition (35) is helping us to understand is whether, in the expanded parity check matrix at the *next lower level*, the path through the polynomial parity check matrix corresponds to a set of path through the parity check matrix that all correspond to cycles in the Tanner graph. In the case of a non-hierarchical QC LDPC code there is only one level of expansion, from the polynomial parity check matrix to the parity check matrix. However, in an HQC LDPC code there are multiple levels of expansion.

Now consider HQC LDPC codes where $K > 1$. Given any path consider whether condition (35) holds for $k = K$. If the condition does not hold then, similar to Fossorier's logic, the path through the parity-check matrix at the next lower level, i.e., through the level-$(K-1)$ polynomial parity check matrix, will not start and end in the same column. In the hierarchical setting each column at level $K-1$ corresponds to a set of variable nodes. However, due to the way we expand out the parity-check matrix using Kronecker products in Definition 1, the sets of variable nodes corresponding to distinct columns of the level-k polynomial parity check matrix for any given k are non-intersecting. A path that originates and terminates in distinct subsets of the variable nodes cannot correspond to a set of cycles. Thus, if (35) does not hold for $k = K$, the path cannot correspond to a set of cycles.

On the other hand, if (35) is satisfied for $k = K$ then cycles *may* exist, depending on what happens at the lower levels. Using the same argument we recurse down the levels from $k = K$ to $k = 1$. If there is any k for which (35) is not satisfied then the path originates from and terminate at distinct variable nodes and therefore does not correspond to a set of cycles. However, if (35) is satisfied for all k, $1 \leq k \leq K$, then the path originates and terminates on the same variable node and cycles exists. ■

We immediately have the following theorem.

Theorem 2: A necessary and sufficient condition for a K-level hierarchical QC LDPC code to have girth at least $2(\Lambda+1)$ is the following. For all paths through the polynomial parity check matrix of length at most 2Λ (path length at least four and at most 2Λ), condition (35) does not hold for at least one k, $1 \leq k \leq K$. ■

B. Examples

We now give examples of two paths through the polynomial parity check matrix of the code of Example 2. In the first we describe a path that corresponds to cycles through the Tanner graph. We first consider the code as a QC LDPC code (ignoring its hierarchical structure) and use Fossorier's condition to verify the existence of cycles. We then look at the same code from a hierarchical perspective to illustrate Theorem 2. In the second example we consider a path through the same code that does not correspond to a cycle through the Tanner graph.

Example 4: (Cycle in an HQC LDPC code) Consider again the polynomial parity check matrices $\mathbf{H}(x)$ and $\mathbf{H}(x,y)$, respectively specified in (23) and (24). First consider the non-hierarchical description of the code specified by $\mathbf{H}(x)$. A cycle of length-four exists traversing the path $\mathcal{P} = \{\mathcal{O}, \mathcal{S}\}$ where

$$\mathcal{O} = \{(0,0),(1,0),(1,5),(0,5)\}.$$

This corresponds to, in order, the four polynomials

$$\begin{array}{lcl} x^2 & = & c_2[0,0]\,x^2, \\ x+x^7 & = & c_1[1,0]\,x + c_7[1,0]\,x^7, \\ x^7 & = & c_7[1,5]\,x^7, \\ 1+x^6 & = & c_0[0,5]\,x^0 + c_6[0,5]\,x^6. \end{array}$$

Selecting out $c_2[0,0]$, $c_1[1,0]$, $c_7[1,5]$ and $c_0[0,5]$ means we choose

$$\mathcal{S} = \{2,1,7,0\}.$$

We calculate the sum in (34) to be

$$\Sigma[1] \bmod 8 = (-2+1-7+0) \bmod 8 = 0, \qquad (36)$$

where $p_{[1]} = 8$ for this code. This example confirms, in the general notation, the test for cycles in non-hierarchical QC LDPC codes already discussed in Sec. IV-A.

Now, consider the same cycle from the hierarchical perspective. With respect to the two-level representation $\mathbf{H}(x,y)$ of (24) the same cycle through the Tanner graph corresponds to the ordered series

$$\mathcal{O} = \{(0,0),(0,0),(0,1),(0,1)\}.$$

Now we have polynomials $x^2+(x+x^7)y^2$ and $x^7y+(1+x^6)y^2$ which, respectively, are

$$c_{2,0}[0,0]\,x^2 + c_{1,2}[0,0]\,xy^2 + c_{7,2}[0,0]\,x^7y^2,$$

and

$$c_{7,1}[0,1]\,x^2 + c_{0,2}[0,1]\,xy^2 + c_{6,2}[0,1]\,x^7y^2.$$

The same cycles correspond to the coefficient indices

$$\mathcal{S} = \left\{ \begin{bmatrix} 2 \\ 0 \end{bmatrix}, \begin{bmatrix} 1 \\ 2 \end{bmatrix}, \begin{bmatrix} 7 \\ 1 \end{bmatrix}, \begin{bmatrix} 0 \\ 2 \end{bmatrix} \right\}.$$

Note that the first sub-index of each coefficient corresponds to the sub-index of the coefficients selected at the one-level view. The alternating sums along the path are

$$\begin{array}{l} \Sigma[1] \bmod 8 = (-2+1-7+0) \mod 8 = 0 \\ \Sigma[2] \bmod 3 = (-0+2-1+2) \mod 3 = 0 \end{array}$$

where $p_{[1]} = 8$ and $p_{[2]} = 3$ for this code. While we do not work out the example for the three-level representation $\mathbf{H}(x,y,z)$ of (25), we note that the ordered traversed by this cycle would be $\mathcal{O} = \{(0,0),(0,0),(0,0),(0,0)\}$. ■

Example 5: (Non-cycle in an HQC LDPC code) We now provide an example of a path through $\mathbf{H}(x,y)$ for which $\Sigma[1] = 0 \bmod p_{[1]}$ but $\Sigma[2] \neq 0 \bmod p_{[2]}$. Let the ordered set be $\mathcal{O} = \{(0,0),(1,0),(1,1),(0,1)\}$. of (24) be $(0,0)$, $(1,0)$, $(1,1)$, $(0,1)$. This corresponds to polynomials $x^2+(x+x^7)y^2$, $x^7y+(1+x^6)y^2$, $x^2+(x+x^7)y^2$, and $x^7y+(1+x^6)y^2$. We select the set of set coefficient indices to be

$$\mathcal{S} = \left\{ \begin{bmatrix} 2 \\ 0 \end{bmatrix}, \begin{bmatrix} 6 \\ 2 \end{bmatrix}, \begin{bmatrix} 2 \\ 0 \end{bmatrix}, \begin{bmatrix} 6 \\ 2 \end{bmatrix} \right\},$$

from which we can verify that $\Sigma[1] = 0 \bmod 8$ but $\Sigma[2] \neq 0 \bmod 3$. Hence while condition (35) holds at level one, it does not hold at level two. Referring to the expanded $\mathbf{H}(x)$ in (23) one can confirm this conclusion using the logic of Sec. IV-A. In particular, x^6 is located in the sixth column of the first row of $\mathbf{H}(x)$, while the polynomial x^2 traversed by the path is located in the fifth column of the fifth row of $\mathbf{H}(x)$. ■

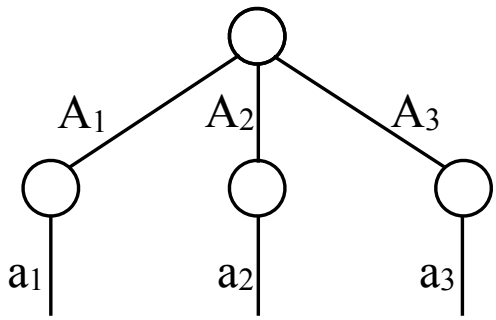

Fig. 7. The labeled trees in a restricted two-level HQC LDPC code will all have two levels, with each node at the bottom level having exactly one leaf below it.

C. Inevitable cycles in HQC LDPC codes

Since HQC LDPC codes are a generalization of QC LDPC codes, they also have inevitable cycles. In this section we describe how the logic and results of Sec. IV-C regarding inevitable cycles extend to HQC LDPC codes. We illustrate the logic for specific examples of HQC LDPC codes that we will use in our design pipeline presented in Sec. VIII.

Recall that in Sec. IV-C we discussed two classes of inevitable cycles. We first saw that there will inevitably be cycles of length six in any weight-III QC LDPC code. We also saw that the code will have eight-cycles if the polynomial parity check matrix $\mathbf{H}(\cdot)$ of a weight-II QC LDPC code contains two weight-two polynomials in any row or in any column.

We analogously find that there will inevitably be cycles of length six for an HQC LDPC code if any labeled tree $\mathbf{T}_{j,l}$ in the tree matrix defining the code has *three leaves*. There will inevitably be eight-cycles if, in any row or in any column of the matrix of labeled trees defining the HQC LDPC code, there is a *pair* of labeled trees *both having two leaves*.

The logic behind these statements is almost identical to the earlier case. We describe it completely for the first situation. We pick a length-six ordered series $\mathcal{O}$ equal to (18), i.e., $\mathcal{O} = \{(j,l),(j,l),(j,l),(j,l),(j,l),(j,l)\}$, where (j,l) is the index of the labeled tree $\mathbf{T}_{j,l}$ that has three leaves. Let the three length-K coefficient vectors correspond to the three leaves be $\mathbf{s}_a, \mathbf{s}_b, \mathbf{s}_c$ and select the coefficient set $\mathcal{S} = \{\mathbf{s}_a, \mathbf{s}_b, \mathbf{s}_c, \mathbf{s}_a, \mathbf{s}_b, \mathbf{s}_c\}$. Then, because each element is both an even and an odd element of the set, (35) is satisfied for every k, just as it was in the QC LDPC example of (19). The logic for automatic eight-cycles follows from the analogous extensions of the choices made in (20) and (21).

We now illustrate these points about inevitable cycles for a subclass of two-level HQC LDPC codes that are described solely by labeled trees with weight-one at the bottom level. That is, none of the leaves of the trees have siblings. In Sec. VIII-A we name such codes *restricted two-level HQC LDPC codes*. An example of such a tree is given in Fig. 7

Example 6: (Inevitable length-six cycle in HQC LDPC codes) First consider any code containing a tree of the type illustrated in Fig. 7. This code has three leaves and so, according to our discussion, the code must contain six cycles. Without loss of generality, let such a tree be located in row j and column l of the parity check matrix $\mathbf{H}(x,y)$. The polynomial has the form

$$x^{a_1}y^{A_1} + x^{a_2}y^{A_2} + x^{a_3}y^{A_3}.$$

As discussed above, choose the ordered series $\mathcal{O}$ to be

$$\mathcal{O} = \{(j,l),(j,l),(j,l),(j,l),(j,l),(j,l)\} \tag{37}$$

and the ordered set of coefficient vectors to be

$$\mathcal{S} = \left\{ \begin{bmatrix} a_1 \\ A_1 \end{bmatrix}, \begin{bmatrix} a_2 \\ A_2 \end{bmatrix}, \begin{bmatrix} a_3 \\ A_3 \end{bmatrix}, \begin{bmatrix} a_1 \\ A_1 \end{bmatrix}, \begin{bmatrix} a_2 \\ A_2 \end{bmatrix}, \begin{bmatrix} a_3 \\ A_3 \end{bmatrix} \right\}. \tag{38}$$

Cycles inevitably exist because

$$(-a_1 + a_2 - a_3 + a_1 - a_2 + a_3) \mod p_{[1]} = 0,$$
$$(-A_1 + A_2 - A_3 + A_1 - A_2 + A_3) \mod p_{[2]} = 0,$$

regardless of the values of the coefficients or of $p_{[1]}$ or $p_{[2]}$. ■

Example 7: (Inevitable length-eight cycle in HQC LDPC codes) Now suppose that the parity check matrix of a restricted two-level HQC LDPC code contains two labeled trees in the same row or column where both trees are similar to the one depicted in Fig. 7, but with only two leaves each.

Suppose that the two weight-two polynomials are in the same row j but in two different columns l_1 and l_2. Let the polynomial at (j,l_1) be $x^{a_1}y^{A_1} + x^{a_2}y^{A_2}$ and let the polynomial at (j,l_2) be $x^{b_1}y^{B_2} + x^{b_2}y^{B_2}$. Consider the same ordered series as in (20), i.e., $\mathcal{O} = \{(j,l_1),(j,l_l),(j,l_2),(j,l_2),(j,l_1),(j,l_1),(j,l_2),(j,l_2)\}$, and choose the ordered set of coefficient indices to be

$$\mathcal{S} = \left\{ \begin{bmatrix} a_1 \\ A_1 \end{bmatrix}, \begin{bmatrix} a_2 \\ A_2 \end{bmatrix}, \begin{bmatrix} b_1 \\ B_1 \end{bmatrix}, \begin{bmatrix} b_2 \\ B_2 \end{bmatrix}, \begin{bmatrix} a_2 \\ A_2 \end{bmatrix}, \begin{bmatrix} a_1 \\ A_1 \end{bmatrix}, \begin{bmatrix} b_2 \\ B_2 \end{bmatrix}, \begin{bmatrix} b_1 \\ B_1 \end{bmatrix} \right\}. \tag{39}$$

Eight cycles are inevitable because

$$(-a_1+a_2-b_1+b_2-a_2+a_1-b_2+b_1) \bmod p_{[1]} = 0,$$
$$(-A_1+A_2-B_1+B_2-A_2+A_1-B_2+B_1) \bmod p_{[2]} = 0,$$

regardless of the values of the coefficients or of $p_{[1]}$ or $p_{[2]}$. ■

VII. Maximizing the girth of QC LDPC codes

In this section we present the ideas behind our girth-maximizing algorithms for QC LDPC and for HQC LDPC codes. The latter is a generalization of the former. These algorithms can rid the codes of all non-inevitable cycles. In Sec. VIII we will describe a secondary procedure for ridding the codes of their inevitable cycles. As the details of the algorithms are somewhat involved, we choose only to describe the basic ideas in the main text, and defer to the appendices the details. The overall algorithms are described in Appendix X-A while in Appendices X-B–X-D we describe the subroutines that contain much of the computational complexity (and descriptive intricacies).

In Section VII-A we describe the general idea of the algorithms, which applies both to QC and to HQC LDPC codes. Then, in Section VII-B we give more detail for the case of weight-I QC LDPC codes. The discussion of the generalization to HQC LDPC codes (which includes higher-weight QC LDPC codes as a special case) is deferred to the appendices.

A. Girth maximization using hill climbing

The general idea of our algorithm (for both QC and HQC LDPC codes) is as follows. We start by specify the desired tree topology of the code by specifying a set of $|\mathcal{T}|$ *unlabeled* trees. We initialize our algorithm with a code chosen randomly from the ensemble of codes that have the desired tree topology. This means that we randomly assign labels to the trees $\mathcal{T}$ subject to the constraints that sibling edges must have distinct labels.

Our algorithm iteratively updates a sequence of edge labels. At each iteration it changes the single edge label to the value that effects the greatest reduction in a cost function. The cost function we use depends on the number of cycles in the current code that have length less than the desired girth. Shorter cycles are weighted to be more costly than longer cycles. The algorithm terminates when either (a) the current values of all coefficients give zero cost (and thus the code has the desired girth), or (b) when we can no longer change any single coefficient to a value that further reduces the cost (and thus the number of undesired cycles). When the tree topology of the code implies the existence of inevitable cycles (b) will always be the stopping criterion. Updates are performed subject to the sibling constraint on edge labels. This preserves the tree topology of the code and thus, e.g., the protograph structure of the code is an invariant under the updates. We note that a change in a single edge label will, in general, have a trickle-down effect on a number of code coefficients (equal to the number of leaves in the tree that are a descendent of that edge).

The main challenge in implementing the algorithm lies in book-keeping: tracking how many cycles of each length the current code contains, and what the resulting number of cycles will be if each edge label is changed to each of its other possible value. The calculation becomes particularly involved when one searches for codes of girth 10 (which is the largest girth for which we have so far implemented our algorithm) because of the many possible ways that eight-cycles can form.

B. Girth maximizing algorithm for QC LDPC codes

In this section we present the main algorithmic ideas in the simplified setting of weight-I QC LDPC codes. This simplification also reduces notation. For the duration of this section, we set $p_{[1]} = p$, $L_{[1]} = L$, $J_{[1]} = J$. Further, path elements are scalars so $\mathbf{s}[j,l] = s[j,l]$. In a weight-I QC LDPC each tree $\mathbf{T}_{j,l}$ has a single edge and $c_s[j,l] \neq 0$ for at most one value of s (if $\mathbf{T}_{j,l} = *$ then $c_s[j,l] = 0$ for all s). The set of *other* possible edge labels are the set of z, $0 \leq z \leq p-1$, such that $z \neq s$ (there are no sibling edges so there are no further constraints on the choice of z).

We now define a set of cost vectors, each of which tracks the cost (in terms of the weighted sum of the number of cycles) of changing any edge label to each of its other possible values. In particular, for each edge in each $\mathbf{T}_{j,l} \neq *$ we define

$$\Gamma_{j,l} = [\gamma_0, \gamma_1, \cdots, \gamma_{p-1}], \tag{40}$$

where $\Gamma_{j,l}(z)$ is the cost we pay for assigning $c_z[j,l] = 1$ for each value of z for $0 \leq z \leq p-1$. If the desired code girth is g then the cost $\Gamma_{j,l}$ is a linear function of the number of cycles of each length that results from each possible choice for z. The weight vector $\mathbf{w} = [w_2, w_3, \cdots, w_{g/2-1}]$ defines the cost function, where w_Λ is the cost assigned to each length-2Λ cycles.

It is useful to visualize the set of cost vectors as a matrix of vectors. For example, a regular $(3,6)$ LDPC code can be represented as

$$\begin{bmatrix} \Gamma_{1,1} & \Gamma_{1,2} & \Gamma_{1,3} & \Gamma_{1,4} & \Gamma_{1,5} & \Gamma_{1,6} \\ \Gamma_{2,1} & \Gamma_{2,2} & \Gamma_{2,3} & \Gamma_{2,4} & \Gamma_{2,5} & \Gamma_{2,6} \\ \Gamma_{3,1} & \Gamma_{3,2} & \Gamma_{3,3} & \Gamma_{3,4} & \Gamma_{3,5} & \Gamma_{3,6} \end{bmatrix}. \tag{41}$$

Given a parity check matrix $\mathbf{H}$ and desired girth g, the cost vectors are calculated via the following argument. We consider the set of all possible and distinct length-2Λ paths per Def. 4, i.e.,

$$\mathcal{P}_\Lambda = \{\mathcal{P}\} = \{\mathcal{O}, \mathcal{S}\} \text{ s.t. } |\mathcal{O}| = |\mathcal{S}| = 2\Lambda \text{ for all } \mathcal{P} \in \mathcal{P}_\Lambda,$$

for $\Lambda = 1, \ldots, g/2$. For each path $\mathcal{P} \in \mathcal{P}_\Lambda$ and each $(j_t, l_t) \in \mathcal{O}$ we consider the corresponding coefficient $s[j_t, l_t] \in \mathcal{S}$. Assuming all other *distinct* coefficients $s[j_{t'}, l_{t'}]$ for $t' \neq t$ are kept fixed we note the "guilty" value(s) of $s[j_t, l_t]$ to be the value z, $0 \leq z \leq p-1$, such that if $s[j_t, l_t]$ were changed to z, then condition (35) would be satisfied. In other words, a cycle would result.

For example, for a potential six-cycle, we know that a cycle will exist if and only if $-s[j_1,l_1] + s[j_2,l_2] - s[j_3,l_3] + s[j_4,l_4] - s[j_5,l_5] + s[j_6,l_6] \bmod p = 0$. Suppose, for example, that the current summed value of $-s[j_1,l_1] + s[j_2,l_2] - s[j_3,l_3] + s[j_4,l_4] - s[j_5,l_5] + s[j_6,l_6] \bmod p$ is equal to one. Then, the guilty values for $s[j_1,l_1]$, $s[j_3,l_3]$, and $s[j_5,l_5]$ would be one less than their respective current values, and the guilty values for $s[j_2,l_2]$, $s[j_4,l_4]$, and $s[j_6,l_6]$ would be one greater than their respective current values.

Computing "guilty" values is relatively uncomplicated for paths consisting of 2Λ *distinct* elements. It becomes more complicated if some elements of the path appear more than once. This can occur in potential eight-cycles and occurs, e.g., in the second example of Fig. 3. In such cases, we must keep in mind that when such coefficients are changed, the contribution to alternating sum can double, triple (e.g., in the length-12 cycle of Fig. 3 because the path passes through each sub-matrix three times), or contribute even more times. Alternately, repeated elements can also cancel (if they enter modulated by both $+1$ and -1), not contributing at all to the sum. We deal with this complexity in Appendix X-B by defining the "multiplicity" κ of a path element; used in the cost calculating algorithms subsequently specified in Appendices X-C and X-D.

VIII. Design pipeline for high-girth QC LDPC codes

In this section we describe our design procedure for high-girth QC LDPC codes. We want to be able to map any interesting protograph into a high-girth QC code. As mentioned earlier, the protographs that motivate us have multiple edges between variable types and check nodes (such as those shown in Fig. 5) and thus QC LDPC codes created from them using a direct transformation would suffer from inevitable cycles.

In this section we show how to map such a protograph into an "inflated" HQC LDPC code structure, on which we can use the girth maximizing algorithm of Sec. VII to remove all non-inevitable cycles. We then show how the resulting HQC LDPC codes can be "squashed" down to yield a non-hierarchical QC LDPC code which no longer contains the inevitable cycles and which is a member of the family of codes described by our protograph. The subclass of HQC LDPC codes with with we work are the *restricted two-level HQC LDPC codes*, already mentioned briefly in the examples of Sec. VI-C.

The outline of the section is as follows. In Sec. VIII-A we fully define the class of restricted two-level HQC LDPC codes. In Sec. VIII-B we show how to directly transform any protograph into such a code. In Sec. VIII-C, we describe the squashing procedure, and finally in Sec. VIII-D, we explain the full design pipeline, including "inflating" the connectivity matrix corresponding to the protograph, directly transforming the inflated connectivity matrix into a family of restricted two-level HQC LDPC codes, maximizing the girth over that family, and squashing the resulting HQC LDPC code.

A. Restricted two-level HQC LDPC codes

As "restricted two-level" implies, the hierarchy in restricted two-level HQC LDPC codes has only two levels. The additional "restriction" is that the weight of the first (lowest) level must be one. In terms of the tree structure description of these codes, the labeled trees will all have a form like that shown in Fig. 7, with the nodes at the bottom level each having exactly one leaf, i.e., leafs have no siblings. In comparison, there are leaves in left-hand tree of Fig. 6 that do have siblings. Nodes at the second level can have an arbitrary number of edges.

The fact that these codes have two levels means that they are described by a polynomial parity check matrix in two dummy variables $\mathbf{H}(x, y)$. The restriction to the lowest level having weight one means that any weight-w polynomial in the matrix $\mathbf{H}(x, y)$ must have the form

$$x^{a_1} y^{A_1} + x^{a_2} y^{A_2} + ... + x^{a_w} y^{A_w} \tag{42}$$

where all the A_i exponents must be distinct. As usual, the exponents are integers which range between 0 and $p_{[1]} - 1$ for the x exponents and 0 and $p_{[2]} - 1$ for the y exponents.

Because the weight at the lowest level is restricted to be one, these codes, when described as standard QC LDPC codes, look like weight-I QC LDPC codes, whose base matrix is composed of circulant sub-matrices of size $p_{[2]}$ by $p_{[2]}$. In [29] Smarandache and Vontobel briefly introduce a further restricted class of such QC LDPC codes (they also required that the codes be weight-II at the second level and that $p_{[2]} = 2$) which they term "type-I QC codes based on double-covers of type-II QC codes."

B. Transforming protographs into Restricted Two-Level HQC LDPC Codes

Recall that in Sec. III, we introduce a "direct transformation" to convert a protograph into an ordinary QC LDPC code. The direct transformation replaces the connectivity matrix equivalent to the protograph with a polynomial parity check matrix $\mathbf{H}(x)$ whose polynomial entries had weight equal to the entries in the connectivity matrix. A completely analogous direct transformation exists for converting protographs into restricted two-level HQC LDPC codes. One replaces the connectivity matrix with a bi-variate polynomial parity check matrix $\mathbf{H}(x, y)$ whose polynomial entries each have the restricted form of (42) and have weight equal to the entries in the connectivity matrix.

For example, the connectivity matrix corresponding to the protograph depicted in Fig. 1 is

$$C = \begin{bmatrix} 1 & 1 & 1 \\ 0 & 1 & 2 \end{bmatrix}. \tag{43}$$

This matrix is directly transformed into a two-level restricted HQC LDPC code with polynomial parity check matrix

$$\mathbf{H}(x, y) = \begin{bmatrix} x^a y^A & x^b y^B & x^c y^C \\ 0 & x^d y^D & x^e y^E + x^f y^F \end{bmatrix}, \tag{44}$$

where a, b, c, d, e, and f are integer exponents between 0 and $p_{[1]} - 1$, and A, B, C, D, E, and F are integer exponents between 0 and $p_{[2]} - 1$ that satisfy $E \neq F$.

C. Squashing sets of trees to eliminate inevitable cycles

Because restricted two-level HQC LDPC codes are weight-I at the lowest level, they can also be considered weight-I QC LDPC codes, and can therefore be described in terms of their base matrix. [1] In this section we develop a technique that selectively removes rows or columns from the base matrix describing a restricted two-level HQC LDPC code in a way that eliminates all inevitable six- and eight-cycles from the corresponding Tanner graphs of the code. There are two underlying assumptions in this section. First, that via a girth-maximization procedure the base matrix entries involved have already been optimized to eliminate all non-inevitable cycles. Second, we concentrate on restricted two-level HQC LDPC codes where $p_{[2]} = 4$, which implies that the base matrix is composed of circulant sub-matrices of size four by four.

There are two situations we will want to consider. Respectively they will correspond to Ex. 6 and 7 of Sec. VI-C. The full connection to these examples will only become clear in the next section, when we explain our "inflation" procedure, which has the effect of placing pairs of similarly structured four by four sub-matrices on top of each other (or besides each other).

The first situation involves a polynomial of weight 3 in the polynomial parity check matrix **H**(x,y), which after inflation will be converted into two polynomials of weight 3, e.g., $h_{1,1}(x, y)$ and $h_{2,1}(x, y)$, with identical y exponents, in the same column of the polynomial parity check matrix. Assuming a restricted two-level code with $p_{[2]} = 4$, the corresponding sub-matrices in the base matrix would respectively look some-

[1] Recall from Sec. II that the base matrix is the matrix of powers of the polynomial parity check matrix expressed in a single dummy variable.

thing like

$$\begin{bmatrix} a & b & c & -1 \\ -1 & a & b & c \\ c & -1 & a & b \\ b & c & -1 & a \end{bmatrix}, \quad \begin{bmatrix} d & e & f & -1 \\ -1 & d & e & f \\ f & -1 & d & e \\ e & f & -1 & d \end{bmatrix} \tag{45}$$

where we recall that -1 represents the $p_{[1]} \times p_{[1]}$ all-zeros matrix.

The second situation involves four polynomials of weight 2 arranged rectilinearly, e.g., $h_{1,1}(x,y)$, $h_{2,1}(x,y)$, $h_{1,2}(x,y)$ and $h_{2,2}(x,y)$,. Furthermore, after inflation, the y exponents of the polynomials in the same column will have the same exponents, so that the corresponding sub-matrices would look something like

$$\begin{bmatrix} a & b & -1 & -1 \\ -1 & a & b & -1 \\ -1 & -1 & a & b \\ b & -1 & -1 & a \end{bmatrix} \begin{bmatrix} -1 & c & d & -1 \\ -1 & -1 & c & d \\ d & -1 & -1 & c \\ c & d & -1 & -1 \end{bmatrix}$$
$$\begin{bmatrix} e & f & -1 & -1 \\ -1 & e & f & -1 \\ -1 & -1 & e & f \\ f & -1 & -1 & e \end{bmatrix} \begin{bmatrix} -1 & g & h & -1 \\ -1 & -1 & g & h \\ h & -1 & -1 & g \\ g & h & -1 & -1 \end{bmatrix}. \tag{46}$$

By the results of Sec. VI-C the first situation contains six-cycles within each sub-matrix and the second situation contains inevitable eight-cycles between the pair of sub-matrices in each row and in each column. We argue that if we "squash" the two matrices in the first example—by stacking the first two rows of the upper matrix on the last two rows of the lower matrix—then the matrix produced

$$\begin{bmatrix} a & b & c & -1 \\ -1 & a & b & c \\ f & -1 & d & e \\ e & f & -1 & d \end{bmatrix} \tag{47}$$

contains no six-cycles. Similar if we squash the matrices in the second example then the resulting pair of matrices

$$\begin{bmatrix} a & b & -1 & -1 \\ -1 & a & b & -1 \\ -1 & -1 & e & f \\ f & -1 & -1 & e \end{bmatrix} \begin{bmatrix} -1 & c & d & -1 \\ -1 & -1 & c & d \\ h & -1 & -1 & g \\ g & h & -1 & -1 \end{bmatrix} \tag{48}$$

contains no eight-cycles.

Since by assumption there were no non-inevitable six- or eight-cycles between the original matrices, to show our assertion we need solely to demonstrate that the squashing procedure removes all inevitable cycles. We argue this based on the following lemma, proved in Appendix X-E.

Lemma 2:

(i) Any inevitable six-cycle within a polynomial of the form $x^{a_1}y^{A_1} + x^{a_2}y^{A_2} + x^{a_3}y^{A_3}$ traverses three distinct rows and three distinct columns of the corresponding base matrix.

(ii) Any inevitable eight-cycles between a pair of polynomials of the form $x^{a_1}y^{A_1} + x^{a_2}y^{A_2}$ and $x^{b_1}y^{B_1} + x^{b_2}y^{B_2}$ located in the same row (column) of the polynomial parity check matrix traverses three distinct rows (columns) of the corresponding base matrix. ■

Now, consider the squashing of the matrices in (45) into the matrix in (47). Note that the latter matrix has only *two* rows from each of the matrices in (45). However, by Lemma 2-(i) all inevitable cycles pass through three rows. Therefore, the matrix in (47) does not contain any inevitable six-cycles.

Next, consider the squashing of the matrices in (46) into the matrices in (48). First we a show that the squashing procedure eliminate the automatic cycles between pairs of matrices arising from pairs of weight-2 polynomials on the same row of the polynomial parity check matrix. This follows from Lemma 2-(ii) which tells us that these eight-cycles traverse three distinct rows, because only two rows of each of the matrices is retained. Next consider the inevitable cycles between pairs of matrices arising from pairs of weight-2 polynomials in the same column of the polynomial parity check matrix. Since we squash vertically, parts of all columns of the base matrix are retained. However, if one examines (48) one sees that the second and fourth columns of the left-hand matrix only includes contributions from the upper left-hand and bottom-left-hand matrices of (46), respectively. The remaining inevitable cycles from (46) therefore cannot include these columns. But, that leaves only two columns in the left-hand matrix and by Lemma 2-(ii) we know that these inevitable cycles require three columns. Therefore the inevitable cycles have been eliminated. The same logic holds for the right-hand side of (48).

Note that for the above logic regarding eight-cycles to hold it is important that the y-exponents of the two matrices to be squashed together (those in the same column) are the same. Thus, e.g., $\mathbf{T}_{1,1}$ $\mathbf{T}_{2,1}$ correspond to any two polynomials of the form $x^a y^A + x^b y^B$ and $x^e y^A + x^f y^B$. Note also that the same squashing procedure would work in the horizontal direction as long as the matrices on the same row have the same y-exponents. The logic is the same with the argument for rows and columns reversed.

D. Design procedure for high-girth codes

We now turn to demonstrating how to construct a weight-I QC LDPC code that does not have any six-cycles or eight-cycles. We first sketch the procedure, depicted in Fig. 8 and then illustrate the details with a worked design example.

Roughly speaking the procedure will start with a desired protograph and code parameter $p_{[1]}$ (our procedure assumes $p_{[2]} = 4$). We first map the protograph into a connectivity matrix, cf. (43). Depending on the weight and relative locations of the entries in the connectivity matrix, we "inflate" the connectivity matrix. We then use the direct mapping of Sec. VIII-B to produce a polynomial parity check matrix for a restricted two-level HQC LDPC code. Next, using our max girth algorithm we eliminate all non-inevitable six- and eight-cycles. Finally, we use the squashing procedure of Sec. VIII-C to eliminate inevitable cycles. Of course, the way in which we

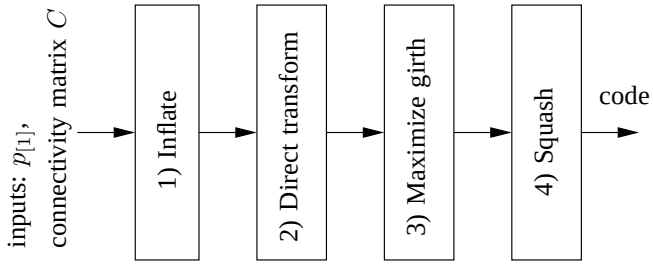

Fig. 8. The design procedure to produce high-girth codes. The inputs are a protograph and the dimension of the first-level circulant matrices. The output is a weight-I QC LDPC code.

inflate the code must be compatible with the way we squash the code to produce a valid parity check matrix that meets the parameters of interest. It should be emphasized that the LDPC code resulting from this procedure will be a QC LDPC and not a *hierarchical* QC LDPC code, although the final structure will be quite similar to that of an HQC LDPC code.

1) Inflate connectivity matrix: As indicated, the procedure first produces the connectivity matrix C of the protograph, which we assume has no entries greater than 3. (We make no effort here to deal with inevitable cycles caused by weights greater than 3). The "inflation" procedure works as follows. We fist mark for duplication each row of the matrix with two or more elements of value 2 or greater or a single element of value 3. We also mark for duplication each column that has two or more elements of value 2 or greater. Then we inflate C to produce a new connectivity matrix C' in which each of the rows in C marked for duplication are duplicated. We then inflate again to produce C'' from C' by duplicating each of the marked columns. As will be evident when we get to squashing, we must track in the matrices C' and C'' which rows and columns are duplicated versions of each other. The following example illustrates the inflating procedure.

Example 8: Suppose we start with a protograph that has the connectivity matrix

$$C = \begin{bmatrix} 3 & 2 & 1 \\ 0 & 2 & 1 \end{bmatrix}. \tag{49}$$

The first row in this connectivity matrix contains an element with value 3 (and also two elements of value 2 or greater), so we mark it, and we also mark the second column because it has two elements with value 2 or greater. Duplicating the first row, we obtain

$$C' = \begin{bmatrix} 3 & 2 & 1 \\ 3 & 2 & 1 \\ 0 & 2 & 1 \end{bmatrix}. \tag{50}$$

Now duplicating the second column, we obtain the inflated connectivity matrix

$$C'' = \begin{bmatrix} 3 & 2 & 2 & 1 \\ 3 & 2 & 2 & 1 \\ 0 & 2 & 2 & 1 \end{bmatrix}. \tag{51}$$

In C'', the first and second rows, and also the second and third columns, are tracked as duplicated versions of each other. ■

2) Directly transformation C'' into $\mathbf{H}''(x,y)$: Next we make a direct transformation of the inflated connectivity matrix C'' into the polynomial parity check matrix $\mathbf{H}''(x,y)$ for a two-level restricted HQC LDPC code with $p_{[2]} = 4$. We perform this transformation under one additional restriction. The restriction is that the y exponents in pairs of duplicated rows or pairs of duplicated columns must be identical to each other. The value of $p_{[1]}$ is left as a design parameter.

Example 8 (continued): The inflated connectivity matrix C'' is directly transformed into a polynomial parity check matrix $\mathbf{H}''(x,y)$, yielding the form

$$\mathbf{H}''(x,y) = \begin{bmatrix} x^a y^A + x^b y^B + x^c y^C & x^d y^D + x^e y^E & x^f y^D + x^g y^E & x^h y^H \\ x^i y^A + x^j y^B + x^k y^C & x^l y^D + x^m y^E & x^n y^D + x^o y^E & x^p y^H \\ 0 & x^q y^Q + x^r y^R & x^s y^Q + x^t y^R & x^u y^U \end{bmatrix}.$$

Notice that the y exponents in the first and second row and in the second and third columns of this matrix have been restricted to be identical to each other. Otherwise, all the exponents are free parameters that satisfy $0 \le a_i \le p_{[1]} - 1$ for any x exponent a_i and $0 \le A_i \le p_{[2]} - 1 = 3$ for any y exponent A_i. ■

3) Maximize the code's girth: In the next step we apply the girth-maximization algorithm of Sec. VII to produce a set of x-exponents a_i and y-exponents A_i such that no short cycles exist except those that are inevitable. Of course, the hill-climbing algorithm of Sec. VII is just one possible approach. Other algorithms could be used in its place. The polynomial parity-check matrix $\mathbf{H}''(x,y)$ obtained in this manner can be converted into an equivalent base matrix $\mathbf{B}''$ for a weight-I QC LDPC code.

Example 8 (continued): Using our girth-maximizing algorithm, we find that with $p_{[1]} = 200$ the following choices for the x and y exponents in $\mathbf{H}''(x,y)$ will create no six-cycles or eight-cycles except for inevitable short cycles:

$$\begin{bmatrix} x^{128}y^1 + x^{69}y^2 + x^{118}y^3 & x^{11}y^2 + x^{121}y^3 & x^{170}y^2 + x^{109}y^3 & x^{38}y^3 \\ x^{63}y^1 + x^{156}y^2 + x^{38}y^3 & x^{186}y^2 + x^{183}y^3 & x^{52}y^2 + x^{146}y^3 & x^{43}y^3 \\ 0 & x^{100}y^0 + x^{104}y^1 & x^{187}y^0 + x^{50}y^1 & x^{59}y^1 \end{bmatrix}.$$

The code with the above polynomial parity check matrix is equivalent to a standard weight-I QC LDPC code with base matrix $\mathbf{B}''$ given by

$$\begin{bmatrix} -1 & 128 & 69 & 118 & -1 & -1 & 11 & 121 & -1 & -1 & 170 & 109 & -1 & -1 & -1 & 38 \\ 118 & -1 & 128 & 69 & 121 & -1 & -1 & 11 & 109 & -1 & -1 & 170 & 38 & -1 & -1 & -1 \\ 69 & 118 & -1 & 128 & 11 & 121 & -1 & -1 & 170 & 109 & -1 & -1 & -1 & 38 & -1 & -1 \\ 128 & 69 & 118 & -1 & -1 & 11 & 121 & -1 & -1 & 170 & 109 & -1 & -1 & -1 & 38 & -1 \\ -1 & 63 & 156 & 38 & -1 & -1 & 186 & 183 & -1 & -1 & 52 & 146 & -1 & -1 & -1 & 43 \\ 38 & -1 & 63 & 156 & 183 & -1 & -1 & 186 & 146 & -1 & -1 & 52 & 43 & -1 & -1 & -1 \\ 156 & 38 & -1 & 63 & 186 & 183 & -1 & -1 & 52 & 146 & -1 & -1 & -1 & 43 & -1 & -1 \\ 63 & 156 & 38 & -1 & -1 & 186 & 183 & -1 & -1 & 52 & 146 & -1 & -1 & -1 & 43 & -1 \\ -1 & -1 & -1 & -1 & 100 & 104 & -1 & -1 & 187 & 50 & -1 & -1 & -1 & 59 & -1 & -1 \\ -1 & -1 & -1 & -1 & -1 & 100 & 104 & -1 & -1 & 187 & 50 & -1 & -1 & -1 & 59 & -1 \\ -1 & -1 & -1 & -1 & -1 & -1 & 100 & 104 & -1 & -1 & 187 & 50 & -1 & -1 & -1 & 59 \\ -1 & -1 & -1 & -1 & 104 & -1 & -1 & 100 & 50 & -1 & -1 & 187 & 59 & -1 & -1 & -1 \end{bmatrix}. \tag{52}$$

Notice that the base matrix $\mathbf{B}''$ is composed of 4 by 4 circulant sub-matrices. ■

4) Squash the base matrix to remove inevitable cycles: We now have a base matrix $\mathbf{B}''$ corresponding to the inflated connectivity matrix C''. The next steps in our procedure will remove columns and rows from $\mathbf{B}''$ to obtain a base matrix corresponding to our original connectivity matrix C.

First, we note that each column of the connectivity matrix C'' corresponds to four columns in the base matrix $\mathbf{B}''$. In the next step of our procedure, we focus on the columns that have been marked as duplicates in C''. We retain the left two columns and remove the right two columns in $\mathbf{B}''$ from the

four that correspond to the left column of a duplicated pair in C'', and also remove the left two columns but retain the right two columns in $\mathbf{B}''$ from the four that correspond to the right column of a duplicated pair in C''. We call the thinned-out base matrix that is obtained from this procedure $\mathbf{B}'$.

Example 8 (continued): Recall that the second and third columns of C'' given in equation (51) have been marked as duplicates of each other. So to obtain $\mathbf{B}'$ from the base matrix $\mathbf{B}''$ given in equation (52), we retain the left two columns from the second four in $\mathbf{B}'$, and the right two columns from the third four in $\mathbf{B}'$, so that $\mathbf{B}'$ is given by

$$\mathbf{B}' = \begin{bmatrix} -1 & 128 & 69 & 118 & -1 & -1 & 170 & 109 & -1 & -1 & -1 & 38 \\ 118 & -1 & 128 & 69 & 121 & -1 & -1 & 170 & 38 & -1 & -1 & -1 \\ 69 & 118 & -1 & 128 & 11 & 121 & -1 & -1 & -1 & 38 & -1 & -1 \\ 128 & 69 & 118 & -1 & -1 & 11 & 109 & -1 & -1 & -1 & 38 & -1 \\ -1 & 63 & 156 & 38 & -1 & -1 & 52 & 146 & -1 & -1 & -1 & 43 \\ 38 & -1 & 63 & 156 & 183 & -1 & -1 & 52 & 43 & -1 & -1 & -1 \\ 156 & 38 & -1 & 63 & 186 & 183 & -1 & -1 & -1 & 43 & -1 & -1 \\ 63 & 156 & 38 & -1 & -1 & 186 & 146 & -1 & -1 & -1 & 43 & -1 \\ -1 & -1 & -1 & -1 & 100 & 104 & -1 & -1 & -1 & 59 & -1 & -1 \\ -1 & -1 & -1 & -1 & -1 & 100 & 50 & -1 & -1 & -1 & 59 & -1 \\ -1 & -1 & -1 & -1 & -1 & -1 & 187 & 50 & -1 & -1 & -1 & 59 \\ -1 & -1 & -1 & -1 & 104 & -1 & -1 & 187 & 59 & -1 & -1 & -1 \end{bmatrix}.$$

■

Now note that each row in the connectivity matrix C' corresponds to four rows in the base matrix $\mathbf{B}'$. In the final step of our procedure, we focus on the rows that have been marked as duplicates in C'. We retain the top two rows in $\mathbf{B}'$ from the four that correspond to the top row in a duplicated pair in C', and we retain the bottom two rows in $\mathbf{B}'$ from the four that correspond to the bottom row of a duplicated pair in C'. We call the base matrix obtained by this further thinning-out procedure $\mathbf{B}$; this is the base matrix that will correspond to our original connectivity matrix C.

Example 8 (continued): The first and second rows of C' given in equation (50) have been marked as duplicates. That means that we should retain the top two rows of the first group of four rows from $\mathbf{B}'$, and the bottom two rows from the second group of four rows. Thus, we obtain

$$\mathbf{B} = \begin{bmatrix} -1 & 128 & 69 & 118 & -1 & -1 & 170 & 109 & -1 & -1 & -1 & 38 \\ 118 & -1 & 128 & 69 & 121 & -1 & -1 & 170 & 38 & -1 & -1 & -1 \\ 156 & 38 & -1 & 63 & 186 & 183 & -1 & -1 & -1 & 43 & -1 & -1 \\ 63 & 156 & 38 & -1 & -1 & 186 & 146 & -1 & -1 & -1 & 43 & -1 \\ -1 & -1 & -1 & -1 & 100 & 104 & -1 & -1 & -1 & 59 & -1 & -1 \\ -1 & -1 & -1 & -1 & -1 & 100 & 50 & -1 & -1 & -1 & 59 & -1 \\ -1 & -1 & -1 & -1 & -1 & -1 & 187 & 50 & -1 & -1 & -1 & 59 \\ -1 & -1 & -1 & -1 & 104 & -1 & -1 & 187 & 59 & -1 & -1 & -1 \end{bmatrix}.$$

Notice that the code defined by the final base matrix $\mathbf{B}$ is not a hierarchical QC LDPC code, because that base matrix is constructed from 4 by 4 sub-matrices that are not circulant. Still, the code is a member of the class defined by the original protograph. In our example, each group of four rows and four columns in the base matrix defines a type of check or bit. So in our example, from the structure of $\mathbf{B}$, each check of the first type will be connected to three bits of the first type, and two bits of the second type, and so on, just as required by the protograph.

In fact, any code defined by a base matrix of a form similar to our $\mathbf{B}$, for example of the form

$$\mathbf{B} = \begin{bmatrix} -1 & a_1 & a_2 & a_3 & -1 & -1 & a_4 & a_5 & -1 & -1 & -1 & a_6 \\ a_7 & -1 & a_8 & a_9 & a_{10} & -1 & -1 & a_{11} & a_{12} & -1 & -1 & -1 \\ a_{13} & a_{14} & -1 & a_{15} & a_{16} & a_{17} & -1 & -1 & -1 & a_{18} & -1 & -1 \\ a_{19} & a_{20} & a_{21} & -1 & -1 & a_{22} & a_{23} & -1 & -1 & -1 & a_{24} & -1 \\ -1 & -1 & -1 & -1 & a_{25} & a_{26} & -1 & -1 & -1 & a_{27} & -1 & -1 \\ -1 & -1 & -1 & -1 & -1 & a_{28} & a_{29} & -1 & -1 & -1 & a_{30} & -1 \\ -1 & -1 & -1 & -1 & -1 & -1 & a_{31} & a_{32} & -1 & -1 & -1 & a_{33} \\ -1 & -1 & -1 & -1 & a_{34} & -1 & -1 & a_{35} & a_{36} & -1 & -1 & -1 \end{bmatrix}, \quad (53)$$

where the a_i parameters are arbitrary, would also be a member of the class defined by our protograph. ■

So the question might be raised, why not simply try to find suitable parameters for a weight-I QC LDPC defined by a base matrix like that in equation (53) directly, instead of using the squashing procedure? This question will be answered in more detail in Section IX, but the short answer is that the squashing procedure is more practical because it enforces useful additional structure in the base matrix, and thus normally involves far fewer parameters for the hill-climbing algorithm to optimize. When one tries to optimize over more parameters, there is a greater chance that the hill-climbing algorithms will get stuck in an unfortunate local optimum.

IX. Numerical results

In this section we present a set of numerical results illustrating our design methodology and associated performance results. In Sec. IX-A we present performance results for a pair of girth-10 one-sided spatially-coupled codes and compare them to those of girth-6 codes. In Sec. IX-B we give a sense of the effectiveness of the hill-climbing approach to girth maximization. We do this by comparing the time required to find a code of a certain girth by hill-climbing and by the guess-and-test algorithm [27]. Finally, in Sec. IX-C we demonstrate the effectiveness of the squashing procedure by comparing to other candidate approaches.

A. Performance of girth-10 QC LDPC codes

In this section we present word-error-rate (WER) and bit-error-rate (BER) results for a pair of girth-10 one-sided spatially-coupled codes. We plot analogous results for girth-6 codes for comparison. The first code is a rate-0.45 length-8000 QC LDPC code. The protograph structure of the code is a lengthened version of the one depicted in Fig. 5(a). As in that protograph, each variable has degree three and check nodes have degree six, four or two. The protograph of the code we present has 20 variable nodes and 11 check nodes (in contrast the protograph in Fig. 5(a) has 14 variable and 8 check nodes). In other words $L_{[2]} = 20$ and $J_{[2]} = 11$. The connectivity matrix of the code is

$$C_1 = \begin{bmatrix} 1&1&0&0&0&0&0&0&0&0&0&0&0&0&0&0&0&0&0&0 \\ 1&1&1&1&0&0&0&0&0&0&0&0&0&0&0&0&0&0&0&0 \\ 1&1&1&1&1&1&0&0&0&0&0&0&0&0&0&0&0&0&0&0 \\ 0&0&1&1&1&1&1&0&0&0&0&0&0&0&0&0&0&0&0&0 \\ 0&0&0&0&1&1&1&1&1&1&0&0&0&0&0&0&0&0&0&0 \\ 0&0&0&0&0&0&1&1&1&1&1&0&0&0&0&0&0&0&0&0 \\ 0&0&0&0&0&0&0&0&1&1&1&1&1&1&0&0&0&0&0&0 \\ 0&0&0&0&0&0&0&0&0&0&1&1&1&1&1&1&0&0&0&0 \\ 0&0&0&0&0&0&0&0&0&0&0&1&1&1&1&1&1&0&0&0 \\ 0&0&0&0&0&0&0&0&0&0&0&0&0&0&1&1&1&1&1&1 \\ 0&0&0&0&0&0&0&0&0&0&0&0&0&0&0&1&1&2&2&2 \end{bmatrix}.$$

Setting $p_{[2]} = 4$ and using our design approach (girth maximization and squashing) we found a girth 10 QC LDPC code with $p_{[1]} = 100$. The code length is $L_{[2]} \times p_{[2]} \times p_{[1]} = 8000$ and its base matrix, B_1, is specified in App. X-F.

The second code is a rate-$1/3$ length-24000 QC LDPC code. The protograph structure of the second code is a shortened version of the structure depicted in Fig. 5(b). As in that protograph the variables are all of degree four. There are six variable nodes and four check node, i.e., $L_{[2]} = 6$ and $J_{[2]} = 4$

(in contrast the protograph in Fig. 5(b) has 14 variable and 8 check nodes). The connectivity matrix of the code

$$C_2 = \begin{bmatrix} 1 & 1 & 0 & 0 & 0 & 0 \\ 1 & 1 & 1 & 1 & 0 & 0 \\ 1 & 1 & 1 & 1 & 1 & 1 \\ 1 & 1 & 2 & 2 & 3 & 3 \end{bmatrix}. \tag{54}$$

Again we use $p_{[2]} = 4$ and find a girth 10 QC LDPC code with $p_{[1]} = 1000$. This code's length is $L_{[2]} \times p_{[2]} \times p_{[1]} = 24000$. The base matrix, B_2, of this code is also specified in App. X-F.

In Figs. 9 and 10 we plot the respective error rate performance for the two codes on the binary symmetric channel (BSC). For purposes of comparison we plot analogous results for three randomly generated girth-6 QC LDPC codes. These codes have the same length, same rate, and same non-zero positions in the base matrix as the girth-10 codes to which they are compared.

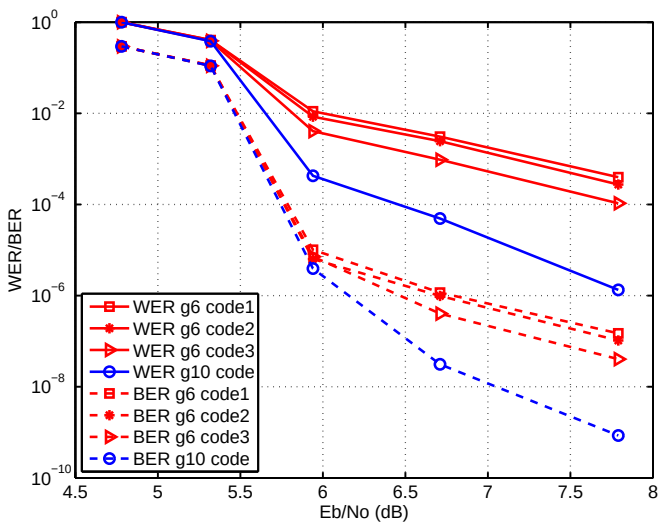

Fig. 9. Word- and bit-error rate plots for the rate-0.45, length-8000 girth-6 and girth-10 QC LDPC codes.

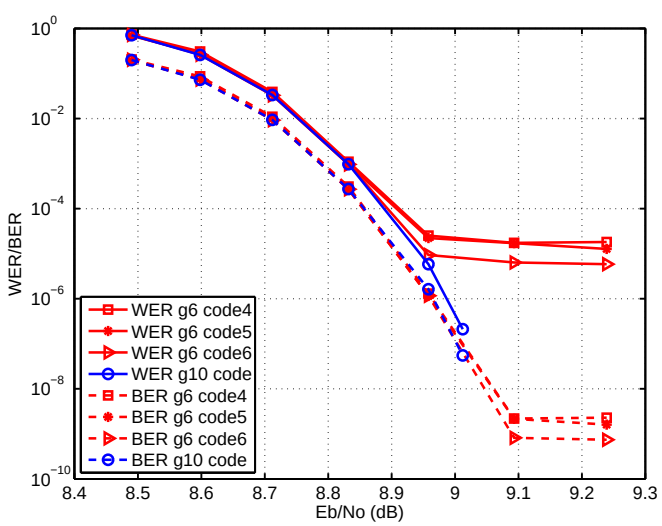

Fig. 10. Word- and bit-error rate plots for the rate-$1/3$, length-24000 girth-6 and girth-10 QC LDPC codes.

In all cases, we plot the WER and BER as a function of the signal-to-noise ratio (SNR), using the Gallager-B decoding algorithm [1] running for a maximum of 200 iterations to guarantee the convergence of decoding. While there is a significant difference between the error rates of a standard sum-product decoder and Gallager-B, the performance trends of Gallager-B and sum-product are mostly quite similar. That said, computational complexity is our main reason to plot results for Gallager-B rather than sum-product. The error floor of Gallager-B occurs at a higher WER and thus is easier to attain. In addition, the Gallager-B algorithm runs very fast. This further helps to collect useful statistics about the error floor regime.

In the plots the SNRs are calculated assuming that the BSC results from hard-decision demodulation of a binary phase-shift keying (BPSK) ± 1 sequence transmitted over an additive white Gaussian noise (AWGN) channel. The resulting relation between the crossover probability p of the equivalent BSC-p and the SNR of the AWGN channel is $p = \mathrm{Q}\left(\sqrt{2R \cdot 10^{SNR/10}}\right)$, where R is the rate of the code and $\mathrm{Q}(\cdot)$ is the Q-function.

Figure 9 plots the results of the rate-0.45 length-8000 codes and illustrates the general improvement to error floor behavior provided by larger girth. At the highest SNR (around 7.8 dB) the WERs and BERs of the girth-10 code is about two orders of magnitude larger than those of the girth-6 codes. Furthermore, the three girth-6 codes plotted do show some variability in their error rates. This illustrates that the error floor is not only a function of girth, though higher girth certainly helps.

Figure 10 plots the results of the rate-$1/3$ length-24000 codes and illustrates some of the same points as were made for the shorter code, as well as some new ones. First, we note that at these lengths the error floor effect is very abrupt, initiating just below 9 dB. Again, higher girth yields a marked improvement, most clearly seen in the WER plots. And again, as also noted in Fig. 9, we see some variability in the girth-6 codes.

A new observation comes from observing that the SNRs at which the error floor of the girth-6 codes becomes noticeable is different for the WER and BER plots. It occurs at a higher SNR for BER. First consider the highest SNR at which we have results for the girth-6 codes, roughly 9.25 dB. Here the difference between WER and BER is about four orders of magnitude. Recalling that the codes are of length 24000 this means that the post-decoding error patterns in this regime consist of only a few erroneous bits, consistent with failures caused by small trapping sets. In contrast, if we consider the last data point prior to the error floor, at around 8.95 dB, the ratio between word- and bit-error rate is only about one order of magnitude. This implies that the BER is still dominated by much heavier weight error patterns, consistent with the decoder being in the waterfall regime. Now, consider the final data point for the girth-10 code that we were able to obtain at just over 9 dB. While by considering the WER plots of the girth-6 codes we confirm that those codes are already in their error floor regime, the same is not true of the girth-10 code,

for which the difference between its WER and BER is less than an order of magnitude.

B. Effectiveness of the girth maximization algorithm

In this section we develop a sense of how much the hill-climbing type of girth maximization algorithm presented in Sec. VII helps in finding high girth codes. We compare our algorithm to the baseline guess-and-test algorithm [27]. To understand guess-and-test, consider a regular weight-I QC LDPC code specified by a $J \times L$ base matrix and a desired girth. Guess-and-test fixes all entries in the first row and the first column of the base matrix to be zero. The rest it chooses independently and uniformly between 0 and $p-1$. This process is continued until a set is found such that the condition for the existence of a cycle, e.g., (13), is verified not to hold for all cycles shorter than the desired girth. The problem with guess-and-test is that it is time-consuming and doesn't exploit the structure of the cycles in its search, in contrast to our hill-climbing algorithm.

To make an informative comparison with guess-and-test, we define "success rate" to be the fraction of times that a run of either algorithm (guess-and-test or hill-climbing) results in a base matrix that has the desired girth and circulant matrices size $p_{[1]}$. Figure 11 depicts the success rate of the guess-and-test and hill climbing in generating girth-8 weight-I regular QC LDPC codes with base matrices of size 3×9. We observe that for the guess-and-test to find a parity check matrix with girth-8 at a circulant size $p_{[1]} = 50$ we need, on average, to test 10^6 random matrices. In contrast, hill climbing has near certain success.

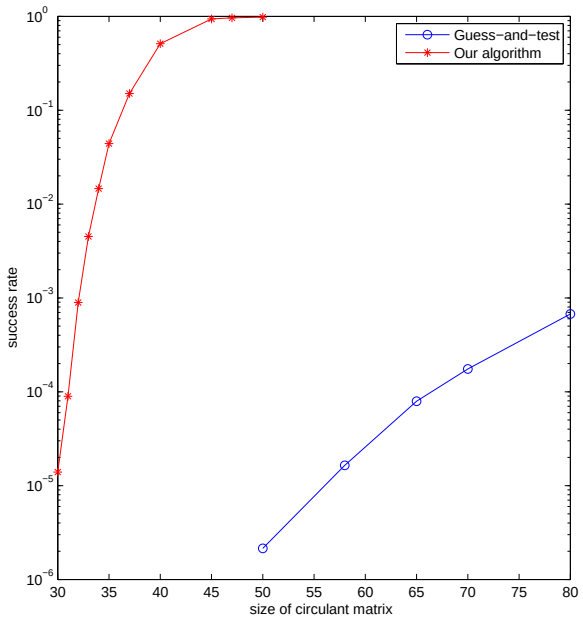

Fig. 11. Comparison of the success rate of guess-and-test and hill climbing in finding a weight-I girth-8 regular QC LDPC code when base matrix dimensions are 3×9.

C. Effectiveness of the squashing procedure

We conclude our discussion of numerical examples by discussing the computational motivations for the squashing procedure. Recall that in Sec. VIII-D we raised the following question. Why do we not simply try directly to find suitable parameters for a weight-I QC LDPC code, rather than constructing an HQC code and using the squashing procedure? We now show that it is much harder to find a suitable code using the direct method.

To show this we present results on the following experiment. First we construct several protographs with structures similar to Fig. 5(a) with the number of check nodes ranging from three to nine. We set $p_{[2]} = 4$ which means that the number of rows in the corresponding base matrices ranges from 12 to 36. For each protograph, we construct girth-10 QC LDPC codes with $p_{[1]} = 100$ using the girth maximization algorithm and the squashing procedure. We also try to construct girth-10 weight-I QC LDPC codes with base matrices having the same size and same non-zero positions as those obtained from the squashing procedure using the direct method. The same hill climbing algorithm is applied to this design problem as is used in conjunction with the HQC LDPC approach. We record the time of designing ten codes for each configuration. Figure 12 depicts the average time required to construct one girth-10 QC LDPC code using each of these two schemes.

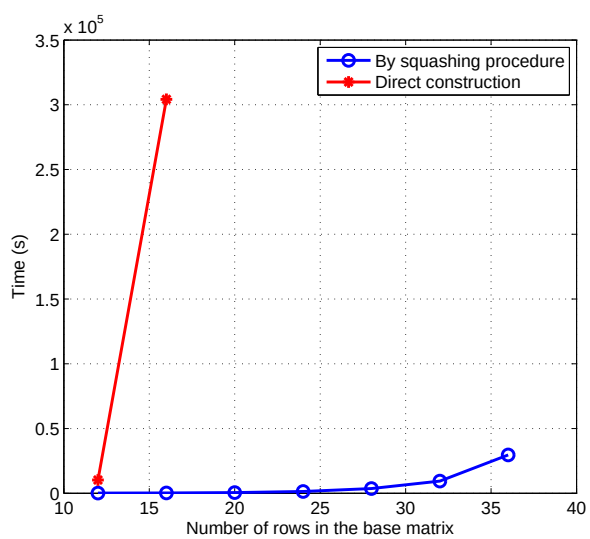

Fig. 12. Average time of constructing one girth-10 QC LDPC code with the direct method and the squashing procedure.

For both schemes, the time required to find a girth-10 code increases with the number of rows in the base matrix. When the squashing procedure is used, we can find a suitable base matrix in reasonable time even for large base matrices (large number of rows). In contrast, when using the direct method, we have to spend an extremely long time searching even for a small base matrices. From this comparison, we conclude that the squashing method is quite a bit more efficient.

X. Conclusion

In this paper we present a methodology for designing high-girth QC LDPC codes that match a given protograph structure. In developing our methodology, we introduce a new class of *hierarchical* QC LDPC codes and explain how to determine the girth of such codes. The hierarchical QC LDPC codes can be represented using parity check matrices over multivariate polynomials, or in terms of a tree structure. We show that higher-weight versions of hierarchical codes suffer from inevitable cycles in analogous ways to non-hierarchical QC LDPC codes, but that a straightforward *squashing* procedure can remove these cycles. We introduce a hill-climbing procedure to eliminate the non-inevitable cycles from the code, and subsequently remove the inevitable cycles by squashing. Thus the main use of the hierarchical codes in this paper is to reduce the number of free parameters in the codes in an effort to make the girth maximization procedure computationally tractable and fast, while knowing that the inevitable cycles can be removed by squashing. In our numerical results we illustrate the computational advantage of the hill-climbing and squashing procedures in comparison with other standard approaches.

We demonstrate our concepts and design procedure for the case of one-sided spatially-coupled QC LDPC codes. We present designs for two such codes, of different rates and block lengths, both of girth-10. We compare their performance to girth-6 codes and observe a significant decrease in the error floor. We note that the second code, whose variable nodes are of weight four, does not demonstrate any error floor tendencies down to a WER of about 10^{-7}, i.e., the slope of the WER as a function of SNR is still steepening. Computational effort limited us from simulating lower WERs. But we note that the Gallager-B algorithm we chose to simulate displays much higher error floors than the standard sum-product or min-sum algorithms. (In fact, this is why we choose to simulate this algorithm.) Given that the class of one-sided spatially coupled codes has already been theoretically shown to have excellent waterfall performance, we believe the evidence presented strongly indicates that the techniques introduced herein can produce practical codes with very good performance in both the waterfall and error floor regimes.

A. Girth maximizing algorithms

In this appendix we present our girth maximizing algorithms. As discussed in the text the objective of these algorithms is to remove all *non-inevitable* cycles from the quasi-cyclic codes. We first present our algorithm for weight-1 QC LDPC codes, and then for general heavier-weight or HQC LDPC codes. We do this for simplicity of explanation as the latter algorithm is a generalization of the former.

Algorithm 1: Weight-I QC LDPC code construction

(i) Set-up and code initialization: Specify the desired girth g, matrix dimension p, and $\mathcal{T}$.

For each pair (j,l) such that $\mathbf{T}_{j,l} \neq *$, pick a value z independently and uniformly from $\{0,\ldots,p-1\}$. Initialize the code with $c_z[j,l]=1$ (and $c_{z'}[j,l]=0$ for all $z' \neq z$).

(ii) Calculate cost vector of current code: Use Subroutine 1, described in Appendix X-C, to calculate the cost vectors of the current code, i.e., $\Gamma = \{\Gamma_{j,l}\}$. Then for each element of Γ we calculate the change in edge label that most reduces cost, and the resulting cost, respectively:

$$\tilde{z}_{j,l} = \underset{z:\,0\le z\le p-1}{\arg\min}\ \Gamma_{j,l}(z),$$
$$\tilde{\Gamma}_{j,l} = \min_{z:\,0\le z\le p-1} \Gamma_{j,l}(z).$$

Recalling that $s[j,l]$ is the value of the of the coefficient of the current code $c_s[j,l]$, let

$$\Gamma^{-}_{j,l} = \Gamma_{j,l}(s[j,l])$$

be the cost of the coefficient if it remains unchanged.

(iii) Identify best coefficient to change: Identify the coefficient to change that would most greatly reduces the cost, i.e.,

$$(j_{\max}, l_{\max}) = \underset{(j,l):\,1\le j\le J,\,1\le l\le L,\,\mathbf{T}_{j,l}\neq *}{\arg\max}\ \Gamma^{-}_{j,l} - \tilde{\Gamma}_{j,l},$$

where we break ties randomly. There are two possible outcomes.

(a) If $\Gamma^{-}_{j_{\max},l_{\max}} - \tilde{\Gamma}_{j_{\max},l_{\max}} > 0$, we update the code by setting
$$c_{\tilde{z}_{j_{max},l_{max}}}[j_{\max}, l_{\max}] = 1,$$
and
$$c_s[j_{\max}, l_{\max}] = 0.$$
We iterate by now returning to Step (ii).

(b) If $\Gamma^{-}_{j_{\max},l_{\max}} - \tilde{\Gamma}_{j_{\max},l_{\max}} = 0$, the algorithm terminates.

(iii) Terminate algorithm: There are two possible termination conditions.

(a) If $\Gamma_{j,l}(s[j,l]) = 0$ for all (j,l) such that $\mathbf{T}_{j,l} \neq *$, then we have found a code that satisfies the desired parameters.

(b) Else if there is a (j,l) such that $\Gamma_{j,l}(s[j,l]) \neq 0$ the algorithm has converged to a local minimum.

We now present the generalized algorithm for heavier-weight QC LDPC and HQC LDPC codes. In contrast to the first algorithm, the trees $\mathbf{T}_{j,l} \in \mathcal{T}$ that define these codes have more than one edge. Therefore, for each edge of each tree we define a cost vector. We index the cost vectors both by their level in the tree and by their position within each level, as well as by j and l, thus

$$\Gamma_{j,l,i,k} = [\gamma_0, \gamma_1, \cdots, \gamma_{p_{[k]}-1}]$$

for $1 \le i \le |\mathbf{T}_{j,l}[k]|$ and $1 \le k \le K$ where we recall that $|\mathbf{T}_{j,l}[k]|$ is the number of edges at level k in $\mathbf{T}_{j,l}$.

Algorithm 2: Hierarchical QC LDPC code construction

(i) Set-up and code initialization: Specify the desired girth g, matrix dimension p, and $\mathcal{T}$.

For each pair (j,l) such that $\mathbf{T}_{j,l} \neq *$, randomly initialize the values for each edge label (while obeying the requirement that sibling edges must have distinct labels). Probably the most straightforward way to do this is to work down the tree from level K to the first level, picking the edge labels for each

set of sibling edges at level k uniformly without replacement from $\{0,\ldots,p_{[k]}-1\}$. Given the initial edge labels, compute all non-zero code coefficients, i.e., those associated with each leaf.

(ii) Calculate cost vector of current code: Use Subroutine 2, described in Appendix X-D, to calculate the cost vectors of the current code, i.e., $\Gamma=\{\Gamma_{j,l,i,k}\}$. Then for each element of Γ we calculate the change in edge label that most reduces cost, and the resulting cost, respectively:

$$\tilde{z}_{j,l,i,k}=\underset{z:0\le z\le p_{[k]}-1}{\arg\min}\ \Gamma_{j,l,i,k}(z),$$
$$\tilde{\Gamma}_{j,l,i,k}=\min_{z:0\le z\le p_{[k]}-1}\Gamma_{j,l,i,k}(z).$$

Recalling that $s_k[j,l]$ is the value of the of the kth coordinate of the current code coefficient $c_{\mathbf{s}}[j,l]$, let

$$\Gamma^{-}_{j,l,i,k}=\Gamma_{j,l,i,k}(s_k[j,l])$$

be the cost if the coefficient value at the kth level remains unchanged.

(iii) Identify best edge label to change: Identify the edge label to change that would most greatly reduces the cost, i.e.,

$$(j_{\max},l_{\max},i_{\max},k_{\max})=\underset{\substack{(j,l,i,k):1\le j\le J_{[K]},1\le l\le L_{[K]}\\ \mathbf{T}_{j,l}\neq *,1\le i\le|\mathbf{T}_{j,l}[k]|\\ 1\le k\le K}}{\arg\max}\ \Gamma^{-}_{j,l,i,k}-\tilde{\Gamma}_{j,l,i,k},$$

where we break ties randomly. There are two possible outcomes.

(a) If $\Gamma^{-}_{j_{\max},l_{\max},i_{\max},k_{\max}}-\tilde{\Gamma}_{j_{\max},l_{\max},i_{\max},k_{\max}}>0$, we update the code by setting the value of the $i_{\max}$th edge at the $k_{\max}$th level of $\mathbf{T}_{j_{\max},l_{\max}}$ equal to $\tilde{z}_{j_{\max},l_{\max},i_{\max},k_{\max}}$. We iterate by now returning to Step (ii).

(b) If $\Gamma^{-}_{j_{\max},l_{\max},i_{\max},k_{\max}}-\tilde{\Gamma}_{j_{\max},l_{\max},i_{\max},k_{\max}}=0$, the algorithm terminates.

(iv) Terminate algorithm: There are two possible termination conditions.

(a) If for all (j,l,i,k) we have $\Gamma_{j,l,i,k}(z)=0$ when z is set to equal the current label of the ith edge at level k in tree $\mathbf{T}_{j,l}$, then we have found a code that satisfies the desired parameters.

(b) Else there is a (j,l,i,k) such that $\Gamma_{j,l,i,k}(z)\neq 0$ and the algorithm has converged to a local minimum.

B. The multiplicity of a path element

Recall from the discussion of Section VII-B that the determination of guilty values becomes complicated when there are repeated elements in a path. To aid in dealing with these repeated elements, in this appendix, we define the "multiplicity" of each path element. This definition is needed for for the cost vector calculation subroutines of both QC and HQC LDPC codes, described in Appendices X-C and X-D, respectively.

Definition 5: Given a path $\mathcal{P}=\{\mathcal{O},\mathcal{S}\}$, any coefficient in $\mathcal{S}$ is said to be *repeated* r times if there are r elements of $\mathcal{P}$, indexed by $i_1,\ldots,i_r$, for which $(j_{i_1},l_{i_1})=(j_{i_2},l_{i_2})=\ldots=(j_{i_r},l_{i_r})$ and for which $\mathbf{s}[j_{i_1},l_{i_1}]=\ldots=\mathbf{s}[j_{i_r},l_{i_r}]$. The *multiplicity* κ of the element is computed as

$$\kappa=\sum_{t=1}^{r}(-1)^{i_t}. \tag{55}$$

For path elements where $|\kappa|>1$, i_1 is termed the *first occurrence* of the element. ■

The multiplicity can be a positive integer, a negative integer, or zero. When a path element has multiplicity zero the value of the coefficient has no effect on whether (that particular) path corresponds to a cycle.

C. Cost calculation subroutine for weight-I QC LDPC codes

In this appendix we present the subroutine for the calculation of the cost vectors of a weight-I QC LDPC code. In other words, given a set of labeled trees we calculate the matrix specified in (41).

Subroutine 1:

The subroutine takes as inputs the current tree structure $\mathcal{T}$ (i.e., the set of labeled trees or, equivalently, the current parity check matrix $\mathbf{H}$), the desired girth g, and a vector of costs $\mathbf{w}$.

(i) Define helper variables: Define $x^{(\Lambda)}_{j,l,z}$ to be the number of cycles of length-2Λ that would result if edge label $s[j,l]$ were set to equal value z. In other words, the code was modified to be one in which $c_z[j,l]=1$ and $c_{z'}[j,l]=0$ for all $z'\neq z$. Initialize all $x^{(\Lambda)}_{j,l,z}=0$.

(ii) Iterate through path lengths, paths, and path elements: Consider in turn: (a) each path length Λ where $2\le\Lambda\le g/2-1$ and g is the desired girth; (b) each path of length Λ, $\mathcal{P}\in\mathcal{P}_\Lambda$ where $\mathcal{P}=\{\mathcal{O},\mathcal{S}\}$ and $|\mathcal{O}|=|\mathcal{S}|=2\Lambda$; and (c) the first occurrence of each path element (indexed by $t,1\le t\le 2\Lambda$) in $\mathcal{P}$ that has non-zero multiplicity.

(iii) Calculate guilty values and adjust helper variables: Let $s[j_\tau,l_\tau]$ be the first occurrence of a path element of multiplicity $\kappa\neq 0$. We want to compute the set of possible values for $s[j_\tau,l_\tau]$ that would satisfy the condition for the existence of a cycle. Recall from (35) that a cycle exists for the current path values if

$$\sum_{t=1}^{2\Lambda}(-1)^t s[j_t,l_t]\bmod p=0. \tag{56}$$

To check if a value $\beta\in\{0,\ldots,p-1\}$ to which $s[j_\tau,l_\tau]$ could be changed would satisfy (56), we subtract the contribution of the current value of $s[j_\tau,l_\tau]$, add in the contribution of the candidate value β, and see if the result is equal to zero. That is, we check whether or not the relation

$$\left\{\sum_{t=1}^{2\Lambda}(-1)^t s[j_t,l_t]-\kappa s[j_\tau,l_\tau]+\kappa\beta\right\}\bmod p=0$$

holds. Equivalently, we ask is

$$\kappa\beta\equiv\kappa s[j_\tau,l_\tau]-\sum_{t=1}^{2\Lambda}(-1)^t s[j_t,l_t], \tag{57}$$

where the congruence is modulo-p?

For each value of β, $0 \leq \beta \leq p-1$ satisfying (57) we increment $x^{(\Lambda)}_{j_\tau,l_\tau,\beta}$ as

$$x^{(\Lambda)}_{j_\tau,l_\tau,\beta} = x^{(\Lambda)}_{j_\tau,l_\tau,\beta} + 1.$$

Remarks: By only computing the β for the first occurrence of each path element, we avoid double-counting the contribution to cycles of elements with $|\kappa| > 1$. Allowing κ, defined in (55), to take on either positive or negative values lets the multiplicity of the element indicate its "aggregate polarity", i.e., whether it enters the sum (56) as a positive or a negative contribution. Since the calculations of β in (57) are over a ring, multiple values of β can satisfy the condition.[2] However, at most there are $|\kappa|$ such values of β. This is because the set of satisfying values of β forms a coset of Z_p with respect to the subgroup $\{\beta \text{ s.t. } \kappa\beta \equiv 0\}$, the cardinality of which is upper bounded by κ. Finally, we note that if $|\kappa| = 1$, a β satisfying (57) exists and it is the unique such β.

(iv) Compute cost vectors: After considering all paths lengths Λ, $2 \leq \Lambda \leq g/2-1$, all $\mathcal{P} \in \mathcal{P}_\Lambda$, and all elements of each path $\mathcal{P}$, calculate the cost vectors element-by-element as

$$\Gamma_{j,l}(z) = \sum_{\Lambda=2}^{g/2-1} x^{(\Lambda)}_{j,l,z} \cdot w_\Lambda.$$

D. Cost calculation subroutine for HQC LDPC codes

We now present the subroutine used to calculate the cost vectors of a general HQC LDPC code.

Subroutine 2:

The subroutine takes as inputs the current tree structure $\mathcal{T}$ (i.e., set of labeled trees or, equivalently, the current parity check matrix $\mathbf{H}$), the desired girth g, and a vector of costs $\mathbf{w}$.

(i) Define helper variables: Define $x^{(\Lambda)}_{j,l,i,z}[k]$ to be the number of cycles of length-2Λ that would result if the ith edge at level k in $\mathbf{T}_{j,l}$ were set to equal value z, $0 \leq z \leq p_{[k]}-1$.

Remark: Modification of a single edge has in a hierarchical code will, in general, change a number of code coefficients. In particular, all coefficients associated with leaves that are descendents of that edge will change in their kth coordinate. These coefficients will change from ones in which

$$c_{s_1,\ldots,s_{k-1},s_k,s_{k+1},\ldots s_K}[j,l] = 1 \quad \text{and}$$
$$c_{s_1,\ldots,s_{k-1},z,s_{k+1},\ldots s_K}[j,l] = 0$$

to ones in which

$$c_{s_1,\ldots,s_{k-1},z,s_{k+1},\ldots s_K}[j,l] = 1 \quad \text{and}$$
$$c_{s_1,\ldots,s_{k-1},s_k,s_{k+1},\ldots s_K}[j,l] = 0.$$

Initialize all $x^{(\Lambda)}_{j,l,i,z}[k] = 0$.

(ii) Set infinite costs: For each $\mathbf{T}_{j,l} \neq *$, each pair (j,l), $1 \leq j \leq J_{[K]}$, $1 \leq l \leq L_{[K]}$, each level k, $1 \leq k \leq K$, and each level-k edge index i, $1 \leq i \leq |\mathbf{T}_{j,l}[k]|$, let $\mathcal{E}$ be the set of labels of sibling edges. For each $z \in \mathcal{E}$ set

$$x^{(\Lambda)}_{j,l,i,z}[k] = \infty.$$

[2]If, however, you restrict p to be prime, which we do not, then the calculations would be over a field and there would be a unique solution β. We do not choose to do this due to the greater limitation on the possible resulting block lengths of the code.

Remark: Recall from the algorithms described in Section VII that our approach to code optimization is to identify the change in the single edge label that most reduces a weighted sum of cycle counts. In the special case of weight-I QC LDPC codes there was a one-to-one mapping between code coefficients and tree edges (since each tree has only a single edge). In the generalized setting we are now considering we seek to identify the change in a single edge of one of the trees that will most reduce the cost. By setting certain costs to infinity, certain changes in code structure will never be made. The changes thus barred are those that would change the tree topology. By setting those costs to infinity we ensure that the unlabeled trees that describe our code remains an invariant under our algorithm.

(iii) Iterate through path lengths, paths, and path elements: Consider in turn: (a) each path length Λ where $2 \leq \Lambda \leq g/2-1$; (b) each path of length Λ, $\mathcal{P} \in \mathcal{P}_\Lambda$ where $\mathcal{P} = \{\mathcal{O}, \mathcal{S}\}$ and $|\mathcal{O}| = |\mathcal{S}| = 2\Lambda$; (c) the first occurrence of each path element (indexed by $t, 1 \leq t \leq 2\Lambda$) in $\mathcal{P}$ that has non-zero multiplicity.

(iv) Determine whether a particular path element can have "guilty" vales: Let $\mathbf{s}[j_\tau, l_\tau]$ be the first occurrence of a path element of multiplicity $\kappa \neq 0$. Recall that $s_k[j_\tau, l_\tau]$ corresponds to the label of an edge of tree $\mathbf{T}_{j_\tau,l_\tau}$ at level k. Now, for the coefficient $\mathbf{s}[j_\tau, l_\tau]$ under consideration, iterate through each level of the code. For each level k, $1 \leq k \leq K$ compute

$$\alpha_k = \sum_{t=1}^{2\Lambda} (-1)^t s_k[j_t, l_t] \bmod p_{[k]}.$$

Unless $\alpha_k = 0$ *for all but one* value of k, there are no guilty values. If there are no guilty values, proceed to the next path element. If there is a single level k' such that $\alpha_{k'} \neq 0$ proceed to step (v).

Remark: The reason for the all-but-one condition is that we change at most one edge label per iteration. Therefore, unless $\alpha_k = 0$ for all but one value of k there is no single change in an edge label that would result in a cycle in this iteration.

(v) Calculate guilty values and adjust helper variables: Now consider coordinate k' of the path element $\mathbf{s}[j_\tau, l_\tau]$ whose multiplicity $\kappa \neq 0$. The same logic as led to (57) can again be used to identify the guilty values, now at level k. That is, compute the set of values of β, $0 \leq \beta \leq p_{[k]}-1$ such that

$$\kappa\beta \equiv \kappa s_k[j_\tau, l_\tau] - \sum_{t=1}^{2\Lambda} (-1)^t s_k[j_t, l_t]. \tag{58}$$

For each value of β, $0 \leq \beta \leq p_{[k]}-1$ satisfying (58) we increment $x^{(\Lambda)}_{j_t,l_t,i,\beta}[k]$ as

$$x^{(\Lambda)}_{j_t,l_t,i,\beta}[k] = x^{(\Lambda)}_{j_t,l_t,i,\beta}[k] + 1.$$

where i, $1 \leq i \leq |\mathbf{T}_{j_t,l_t}[k]|$, is the index of the level-k edge in $\mathbf{T}_{j_t,l_t}$ whose label is $s_k[j_\tau, l_\tau]$.

Remarks: One of the added complications of the generalized algorithm is that there is not a one-to-one mapping between the code parameters that we are adjusting (the tree edge values) and the code coefficients (each of which is associated with

$$\begin{bmatrix} a_1 & a_2 & a_3 & -1 \\ -1 & a_1 & a_2 & a_3 \\ a_3 & -1 & a_1 & a_2 \\ a_2 & a_3 & -1 & a_1 \end{bmatrix}$$

Fig. 13. Illustrative inevitable six-cycle that traverses three rows and three columns.

$$\begin{bmatrix} a_1 & a_2 & -1 & -1 \\ -1 & a_1 & a_2 & -1 \\ -1 & -1 & a_1 & a_2 \\ a_2 & -1 & -1 & a_1 \end{bmatrix} \begin{bmatrix} b_1 & -1 & -1 & b_2 \\ b_2 & b_1 & -1 & -1 \\ -1 & b_2 & b_1 & -1 \\ -1 & -1 & b_2 & b_1 \end{bmatrix}$$

Fig. 14. Illustrative inevitable eight-cycle that traverses three rows.

one leaf of the tree). When an edge value is adjusted there is a ripple effect, changing the coefficients associated with all descendent leaves. However, each change in a edge label effects only one of the K sums (34), all of which Theorem 2 requires to be equal to zero for a cycle to exist. Thus, although there is a ripple effect on the code coefficient when adjusting edge labels, the values of the $\Sigma[k]$ at other levels is not effected. Thus, considering the tree structure of the code nicely decouples the question of girth and the search for high-girths from the algebraic structure of the code.

E. Proof of Lemma 2

To prove part (i) of the lemma consider the ordered set of coefficients (38) that describes the inevitable cycle. Note that the first and last coefficient must be in the same row of the base matrix since the path defines a cycle. The second and third and the fourth and fifth coefficients must also each be in the same row. Since, when viewed at the first level of the code, successive rows in a path must be distinct, three distinct rows are traversed. In Fig. 13 we illustrate this logic for a matrix corresponding to the polynomial $h_{j,l}(x,y) = x^{a_1}y^0 + x^{a_2}y^1 + x^{a_3}y^2$, $\mathcal{O} = \{(j,l),(j,l),(j,l),(j,l),(j,l),(j,l)\}$,and $\mathcal{S} = \{[a_1\ 0]^T, [a_2\ 1]^T, [a_3\ 2]^T, [a_1\ 0]^T, [a_2\ 1]^T, [a_3\ 2]^T\}$

The logic of part (ii) is the same for rows and columns, hence we provide the proof only for part the former. Consider the ordered set of coefficients of (39). We assert that again the path must traverse at least three rows of the base matrix. As before the first and last coefficients must be in the same row since this path defines an inevitable cycle. Each other sequential pair of elements – $([a_2\ A_2]^T, [b_1\ B_1]^T)$, $([b_2\ B_2]^T, [a_2\ A_2]^T)$, and $([a_1\ A_1]^T, [b_2\ B_2]^T)$ – must also lie in the same rows. Consider the pair $([b_2\ B_2]^T, [a_2\ A_2]^T)$. The row this pair lies in can either be distinct from the starting row or it can be the same. If this row is distinct from the starting row then, since successive rows are distinct, the row in which $([a_2\ A_2]^T, [b_1\ B_1]^T)$ lies must be distinct both from this row and from the starting row and the lemma is proved for this case. On the other hand, say $([b_2\ B_2]^T, [a_2\ A_2]^T)$ lies in the starting row. We assert that in this case $([a_2\ A_2]^T, [b_1\ B_1]^T)$ and $([a_1\ A_1]^T, [b_2\ B_2]^T)$ must lie in distinct rows and so the total number of rows again is at least three. To see this last assertion note first that the first $[a_1\ A_1]^T$ and the fifth coefficient $[a_2\ A_2]^T$ are, by assumption, in the same row. Next observe that the second and sixth coefficients are $[a_2\ A_2]^T$ and $[a_1\ A_1]^T$, respectively, both in distinct rows from the first. As long as $p_{[2]} > 2$ these latter two coefficients (the second and sixth) must be in distinct rows of the base matrix. This follows from the cyclic nature of the code. The only way a pair of coefficients could appear in two distinct rows and two distinct columns in swapped order would be if $p_{[2]} = 2$, but we have assumed that $p_{[2]} = 4$.

The logic of the second case is illustrated in Fig. 14 for the pair of polynomials $h_{j,l_1} = x^a + x^b y$ and $h_{j,l_2} = x^c + x^d y^3$. The path illustrated corresponds to

$$\mathcal{O} = \{(j,l_1),(j,l_1),(j,l_2),(j,l_2),(j,l_1),(j,l_1),(j,l_2),(j,l_2)\}$$

and

$$\mathcal{S} = \left\{ \begin{bmatrix} a_1 \\ 0 \end{bmatrix}, \begin{bmatrix} a_2 \\ 1 \end{bmatrix}, \begin{bmatrix} b_1 \\ 0 \end{bmatrix}, \begin{bmatrix} b_2 \\ 3 \end{bmatrix}, \begin{bmatrix} a_2 \\ 1 \end{bmatrix}, \begin{bmatrix} a_1 \\ 0 \end{bmatrix}, \begin{bmatrix} b_2 \\ 3 \end{bmatrix}, \begin{bmatrix} b_1 \\ 0 \end{bmatrix} \right\}.$$

F. Base matrices

In this appendix, the base matrices of the two girth 10 QC LDPC codes discussed in Sec. IX are specified below. The base matrix of the first code, B_1 is written in the transposed format due to space.

References

[1] R. G. Gallager, *Low-Density Parity-Check Codes*. Cambridge, MA: M.I.T. Press, 1963.

[2] W. E. Ryan and S. Lin, *Channel Codes: Classical and Modern*, Cambridge University Press, 2009.

[3] D. J. C. MacKay, "Good error-correcting codes based on very sparse matrices," *IEEE Trans. Inform. Theory*, vol. 45, pp. 399-431, Mar. 1999.

[4] T. J. Richardson, M. A. Shokrollahi, and R. L. Urbanke, "Design of capacity-approaching irregular low-density parity check codes," *IEEE Trans. Inform. Theory*, vol. 47, pp. 619-637, Feb. 2001.

[5] M. G. Luby, M. Mitzenmacher, M. A. Shokrollahi, and D. A. Spielman, "Improved low-density parity check codes using irregular graphs," *IEEE Trans. Inform. Theory*, vol. 47, pp. 585-598, Feb. 2001.

[6] S. Y. Chung, G. D. Forney, T. J. Richardson, and R. L. Urbanke, "On the design of low-density parity check codes within 0.0045 dB of the Shannon limit," *IEEE Commun. Lett.*, vol. 5, pp. 58-60, Feb. 2001.

[7] T. Richardson and R. Urbanke, *Modern Coding Theory*, Cambridge University Press, 2008.

[8] IEEE Std 802.16e, "Air interface for fixed and mobile broadband wireless access systems," [Online]. Available: http://standards.ieee.org/getieee802/download/802.16e-2005.pdf.

[9] Draft DVB-S2 Standard, [Online]. Available: http://www.dvb.org.

[10] B. Bangerter *et al.*, "High-throughput wireless LAN air interface," *J. Intel Technol.*, vol. 7, pp. 47-57, Aug. 2003.

[11] G. Liva, S. Song, L. Lan, Y. Zhang, S. Lin, and W.E. Ryan, "Design of LDPC Codes: A Survey and New Results," *J. Comm. Software and Systems*, Sept. 2006.

[12] Y. Kou, S. Lin, and M. Fossorier, "Low-density parity-check codes based on finite geometries: a rediscovery and new results," *IEEE Trans. Inform. Theory*, vol. 47, pp. 2711-2736, Nov. 2001.

[13] J. L. Fan, "Array codes as low-density parity-check codes," *Proc. 2nd Int. Symp. Turbo Codes*, Brest, France, Sept. 2000, pp. 545-546.

B_1^T =

$$\begin{bmatrix}
-1 & 34 & -1 & -1 & -1 & 1 & -1 & -1 & -1 & -1 & 27 & -1 & -1 & -1 & -1 & -1 & -1 & -1 & -1 & -1 & -1 & -1 & -1 & -1 & -1 & -1 & -1 & -1 & -1 & -1 & -1 & -1 & -1 & -1 & -1 & -1 & -1 & -1 & -1 & -1 & -1 & -1 & -1 & -1 \\
-1 & -1 & 34 & -1 & -1 & -1 & 1 & -1 & -1 & -1 & -1 & 27 & -1 & -1 & -1 & -1 & -1 & -1 & -1 & -1 & -1 & -1 & -1 & -1 & -1 & -1 & -1 & -1 & -1 & -1 & -1 & -1 & -1 & -1 & -1 & -1 & -1 & -1 & -1 & -1 & -1 & -1 & -1 & -1 \\
-1 & -1 & -1 & 34 & -1 & -1 & -1 & 1 & 27 & -1 & -1 & -1 & -1 & -1 & -1 & -1 & -1 & -1 & -1 & -1 & -1 & -1 & -1 & -1 & -1 & -1 & -1 & -1 & -1 & -1 & -1 & -1 & -1 & -1 & -1 & -1 & -1 & -1 & -1 & -1 & -1 & -1 & -1 & -1 \\
34 & -1 & -1 & -1 & 1 & -1 & -1 & -1 & -1 & 27 & -1 & -1 & -1 & -1 & -1 & -1 & -1 & -1 & -1 & -1 & -1 & -1 & -1 & -1 & -1 & -1 & -1 & -1 & -1 & -1 & -1 & -1 & -1 & -1 & -1 & -1 & -1 & -1 & -1 & -1 & -1 & -1 & -1 & -1 \\
-1 & -1 & -1 & 7 & -1 & 54 & -1 & -1 & 21 & -1 & -1 & -1 & -1 & -1 & -1 & -1 & -1 & -1 & -1 & -1 & -1 & -1 & -1 & -1 & -1 & -1 & -1 & -1 & -1 & -1 & -1 & -1 & -1 & -1 & -1 & -1 & -1 & -1 & -1 & -1 & -1 & -1 & -1 & -1 \\
7 & -1 & -1 & -1 & -1 & -1 & 54 & -1 & -1 & 21 & -1 & -1 & -1 & -1 & -1 & -1 & -1 & -1 & -1 & -1 & -1 & -1 & -1 & -1 & -1 & -1 & -1 & -1 & -1 & -1 & -1 & -1 & -1 & -1 & -1 & -1 & -1 & -1 & -1 & -1 & -1 & -1 & -1 & -1 \\
-1 & 7 & -1 & -1 & -1 & -1 & -1 & 54 & -1 & -1 & 21 & -1 & -1 & -1 & -1 & -1 & -1 & -1 & -1 & -1 & -1 & -1 & -1 & -1 & -1 & -1 & -1 & -1 & -1 & -1 & -1 & -1 & -1 & -1 & -1 & -1 & -1 & -1 & -1 & -1 & -1 & -1 & -1 & -1 \\
-1 & -1 & 7 & -1 & 54 & -1 & -1 & -1 & -1 & -1 & -1 & 21 & -1 & -1 & -1 & -1 & -1 & -1 & -1 & -1 & -1 & -1 & -1 & -1 & -1 & -1 & -1 & -1 & -1 & -1 & -1 & -1 & -1 & -1 & -1 & -1 & -1 & -1 & -1 & -1 & -1 & -1 & -1 & -1 \\
-1 & -1 & -1 & -1 & -1 & -1 & -1 & 78 & -1 & -1 & 89 & -1 & -1 & 79 & -1 & -1 & -1 & -1 & -1 & -1 & -1 & -1 & -1 & -1 & -1 & -1 & -1 & -1 & -1 & -1 & -1 & -1 & -1 & -1 & -1 & -1 & -1 & -1 & -1 & -1 & -1 & -1 & -1 & -1 \\
-1 & -1 & -1 & -1 & 78 & -1 & -1 & -1 & -1 & -1 & -1 & 89 & -1 & -1 & 79 & -1 & -1 & -1 & -1 & -1 & -1 & -1 & -1 & -1 & -1 & -1 & -1 & -1 & -1 & -1 & -1 & -1 & -1 & -1 & -1 & -1 & -1 & -1 & -1 & -1 & -1 & -1 & -1 & -1 \\
-1 & -1 & -1 & -1 & -1 & 78 & -1 & -1 & 89 & -1 & -1 & -1 & -1 & -1 & -1 & 79 & -1 & -1 & -1 & -1 & -1 & -1 & -1 & -1 & -1 & -1 & -1 & -1 & -1 & -1 & -1 & -1 & -1 & -1 & -1 & -1 & -1 & -1 & -1 & -1 & -1 & -1 & -1 & -1 \\
-1 & -1 & -1 & -1 & -1 & -1 & 78 & -1 & -1 & 89 & -1 & -1 & 79 & -1 & -1 & -1 & -1 & -1 & -1 & -1 & -1 & -1 & -1 & -1 & -1 & -1 & -1 & -1 & -1 & -1 & -1 & -1 & -1 & -1 & -1 & -1 & -1 & -1 & -1 & -1 & -1 & -1 & -1 & -1 \\
-1 & -1 & -1 & -1 & -1 & -1 & 42 & -1 & -1 & -1 & 79 & -1 & -1 & 75 & -1 & -1 & -1 & -1 & -1 & -1 & -1 & -1 & -1 & -1 & -1 & -1 & -1 & -1 & -1 & -1 & -1 & -1 & -1 & -1 & -1 & -1 & -1 & -1 & -1 & -1 & -1 & -1 & -1 & -1 \\
-1 & -1 & -1 & -1 & -1 & -1 & -1 & 42 & -1 & -1 & -1 & 79 & -1 & -1 & 75 & -1 & -1 & -1 & -1 & -1 & -1 & -1 & -1 & -1 & -1 & -1 & -1 & -1 & -1 & -1 & -1 & -1 & -1 & -1 & -1 & -1 & -1 & -1 & -1 & -1 & -1 & -1 & -1 & -1 \\
-1 & -1 & -1 & -1 & 42 & -1 & -1 & -1 & 79 & -1 & -1 & -1 & -1 & -1 & -1 & 75 & -1 & -1 & -1 & -1 & -1 & -1 & -1 & -1 & -1 & -1 & -1 & -1 & -1 & -1 & -1 & -1 & -1 & -1 & -1 & -1 & -1 & -1 & -1 & -1 & -1 & -1 & -1 & -1 \\
-1 & -1 & -1 & -1 & -1 & 42 & -1 & -1 & -1 & 79 & -1 & -1 & 75 & -1 & -1 & -1 & -1 & -1 & -1 & -1 & -1 & -1 & -1 & -1 & -1 & -1 & -1 & -1 & -1 & -1 & -1 & -1 & -1 & -1 & -1 & -1 & -1 & -1 & -1 & -1 & -1 & -1 & -1 & -1 \\
-1 & -1 & -1 & -1 & -1 & -1 & -1 & -1 & -1 & -1 & 38 & -1 & 93 & -1 & -1 & -1 & -1 & -1 & 92 & -1 & -1 & -1 & -1 & -1 & -1 & -1 & -1 & -1 & -1 & -1 & -1 & -1 & -1 & -1 & -1 & -1 & -1 & -1 & -1 & -1 & -1 & -1 & -1 & -1 \\
-1 & -1 & -1 & -1 & -1 & -1 & -1 & -1 & -1 & -1 & -1 & 38 & -1 & 93 & -1 & -1 & -1 & -1 & -1 & 92 & -1 & -1 & -1 & -1 & -1 & -1 & -1 & -1 & -1 & -1 & -1 & -1 & -1 & -1 & -1 & -1 & -1 & -1 & -1 & -1 & -1 & -1 & -1 & -1 \\
-1 & -1 & -1 & -1 & -1 & -1 & -1 & -1 & 38 & -1 & -1 & -1 & -1 & -1 & 93 & -1 & 92 & -1 & -1 & -1 & -1 & -1 & -1 & -1 & -1 & -1 & -1 & -1 & -1 & -1 & -1 & -1 & -1 & -1 & -1 & -1 & -1 & -1 & -1 & -1 & -1 & -1 & -1 & -1 \\
-1 & -1 & -1 & -1 & -1 & -1 & -1 & -1 & -1 & 38 & -1 & -1 & -1 & -1 & -1 & 93 & -1 & 92 & -1 & -1 & -1 & -1 & -1 & -1 & -1 & -1 & -1 & -1 & -1 & -1 & -1 & -1 & -1 & -1 & -1 & -1 & -1 & -1 & -1 & -1 & -1 & -1 & -1 & -1 \\
-1 & -1 & -1 & -1 & -1 & -1 & -1 & -1 & -1 & 40 & -1 & -1 & -1 & -1 & 76 & -1 & 15 & -1 & -1 & -1 & -1 & -1 & -1 & -1 & -1 & -1 & -1 & -1 & -1 & -1 & -1 & -1 & -1 & -1 & -1 & -1 & -1 & -1 & -1 & -1 & -1 & -1 & -1 & -1 \\
-1 & -1 & -1 & -1 & -1 & -1 & -1 & -1 & -1 & -1 & 40 & -1 & -1 & -1 & -1 & 76 & -1 & 15 & -1 & -1 & -1 & -1 & -1 & -1 & -1 & -1 & -1 & -1 & -1 & -1 & -1 & -1 & -1 & -1 & -1 & -1 & -1 & -1 & -1 & -1 & -1 & -1 & -1 & -1 \\
-1 & -1 & -1 & -1 & -1 & -1 & -1 & -1 & -1 & -1 & -1 & 40 & 76 & -1 & -1 & -1 & -1 & -1 & 15 & -1 & -1 & -1 & -1 & -1 & -1 & -1 & -1 & -1 & -1 & -1 & -1 & -1 & -1 & -1 & -1 & -1 & -1 & -1 & -1 & -1 & -1 & -1 & -1 & -1 \\
-1 & -1 & -1 & -1 & -1 & -1 & -1 & -1 & 40 & -1 & -1 & -1 & -1 & 76 & -1 & -1 & -1 & -1 & -1 & 15 & -1 & -1 & -1 & -1 & -1 & -1 & -1 & -1 & -1 & -1 & -1 & -1 & -1 & -1 & -1 & -1 & -1 & -1 & -1 & -1 & -1 & -1 & -1 & -1 \\
-1 & -1 & -1 & -1 & -1 & -1 & -1 & -1 & -1 & -1 & -1 & -1 & -1 & 25 & -1 & -1 & -1 & -1 & 81 & -1 & -1 & -1 & -1 & 60 & -1 & -1 & -1 & -1 & -1 & -1 & -1 & -1 & -1 & -1 & -1 & -1 & -1 & -1 & -1 & -1 & -1 & -1 & -1 & -1 \\
-1 & -1 & -1 & -1 & -1 & -1 & -1 & -1 & -1 & -1 & -1 & -1 & -1 & -1 & 25 & -1 & -1 & -1 & -1 & 81 & 60 & -1 & -1 & -1 & -1 & -1 & -1 & -1 & -1 & -1 & -1 & -1 & -1 & -1 & -1 & -1 & -1 & -1 & -1 & -1 & -1 & -1 & -1 & -1 \\
-1 & -1 & -1 & -1 & -1 & -1 & -1 & -1 & -1 & -1 & -1 & -1 & -1 & -1 & -1 & 25 & 81 & -1 & -1 & -1 & -1 & 60 & -1 & -1 & -1 & -1 & -1 & -1 & -1 & -1 & -1 & -1 & -1 & -1 & -1 & -1 & -1 & -1 & -1 & -1 & -1 & -1 & -1 & -1 \\
-1 & -1 & -1 & -1 & -1 & -1 & -1 & -1 & -1 & -1 & -1 & -1 & 25 & -1 & -1 & -1 & -1 & 81 & -1 & -1 & -1 & -1 & 60 & -1 & -1 & -1 & -1 & -1 & -1 & -1 & -1 & -1 & -1 & -1 & -1 & -1 & -1 & -1 & -1 & -1 & -1 & -1 & -1 & -1 \\
-1 & -1 & -1 & -1 & -1 & -1 & -1 & -1 & -1 & -1 & -1 & -1 & -1 & -1 & 63 & -1 & -1 & -1 & 91 & -1 & -1 & -1 & 0 & -1 & -1 & -1 & -1 & -1 & -1 & -1 & -1 & -1 & -1 & -1 & -1 & -1 & -1 & -1 & -1 & -1 & -1 & -1 & -1 & -1 \\
-1 & -1 & -1 & -1 & -1 & -1 & -1 & -1 & -1 & -1 & -1 & -1 & -1 & -1 & -1 & 63 & -1 & -1 & -1 & 91 & -1 & -1 & -1 & 0 & -1 & -1 & -1 & -1 & -1 & -1 & -1 & -1 & -1 & -1 & -1 & -1 & -1 & -1 & -1 & -1 & -1 & -1 & -1 & -1 \\
-1 & -1 & -1 & -1 & -1 & -1 & -1 & -1 & -1 & -1 & -1 & -1 & 63 & -1 & -1 & -1 & 91 & -1 & -1 & -1 & 0 & -1 & -1 & -1 & -1 & -1 & -1 & -1 & -1 & -1 & -1 & -1 & -1 & -1 & -1 & -1 & -1 & -1 & -1 & -1 & -1 & -1 & -1 & -1 \\
-1 & -1 & -1 & -1 & -1 & -1 & -1 & -1 & -1 & -1 & -1 & -1 & -1 & 63 & -1 & -1 & -1 & 91 & -1 & -1 & -1 & 0 & -1 & -1 & -1 & -1 & -1 & -1 & -1 & -1 & -1 & -1 & -1 & -1 & -1 & -1 & -1 & -1 & -1 & -1 & -1 & -1 & -1 & -1 \\
-1 & -1 & -1 & -1 & -1 & -1 & -1 & -1 & -1 & -1 & -1 & -1 & -1 & -1 & -1 & -1 & -1 & -1 & 38 & -1 & 90 & -1 & -1 & -1 & -1 & 21 & -1 & -1 & -1 & -1 & -1 & -1 & -1 & -1 & -1 & -1 & -1 & -1 & -1 & -1 & -1 & -1 & -1 & -1 \\
-1 & -1 & -1 & -1 & -1 & -1 & -1 & -1 & -1 & -1 & -1 & -1 & -1 & -1 & -1 & -1 & -1 & -1 & -1 & 38 & -1 & 90 & -1 & -1 & -1 & -1 & 21 & -1 & -1 & -1 & -1 & -1 & -1 & -1 & -1 & -1 & -1 & -1 & -1 & -1 & -1 & -1 & -1 & -1 \\
-1 & -1 & -1 & -1 & -1 & -1 & -1 & -1 & -1 & -1 & -1 & -1 & -1 & -1 & -1 & -1 & 38 & -1 & -1 & -1 & -1 & -1 & 90 & -1 & -1 & -1 & -1 & 21 & -1 & -1 & -1 & -1 & -1 & -1 & -1 & -1 & -1 & -1 & -1 & -1 & -1 & -1 & -1 & -1 \\
-1 & -1 & -1 & -1 & -1 & -1 & -1 & -1 & -1 & -1 & -1 & -1 & -1 & -1 & -1 & -1 & -1 & 38 & -1 & -1 & -1 & -1 & -1 & 90 & 21 & -1 & -1 & -1 & -1 & -1 & -1 & -1 & -1 & -1 & -1 & -1 & -1 & -1 & -1 & -1 & -1 & -1 & -1 & -1 \\
-1 & -1 & -1 & -1 & -1 & -1 & -1 & -1 & -1 & -1 & -1 & -1 & -1 & -1 & -1 & -1 & -1 & -1 & 73 & -1 & -1 & -1 & -1 & 96 & -1 & -1 & -1 & 66 & -1 & -1 & -1 & -1 & -1 & -1 & -1 & -1 & -1 & -1 & -1 & -1 & -1 & -1 & -1 & -1 \\
-1 & -1 & -1 & -1 & -1 & -1 & -1 & -1 & -1 & -1 & -1 & -1 & -1 & -1 & -1 & -1 & -1 & -1 & -1 & 73 & 96 & -1 & -1 & -1 & 66 & -1 & -1 & -1 & -1 & -1 & -1 & -1 & -1 & -1 & -1 & -1 & -1 & -1 & -1 & -1 & -1 & -1 & -1 & -1 \\
-1 & -1 & -1 & -1 & -1 & -1 & -1 & -1 & -1 & -1 & -1 & -1 & -1 & -1 & -1 & -1 & 73 & -1 & -1 & -1 & -1 & 96 & -1 & -1 & -1 & 66 & -1 & -1 & -1 & -1 & -1 & -1 & -1 & -1 & -1 & -1 & -1 & -1 & -1 & -1 & -1 & -1 & -1 & -1 \\
-1 & -1 & -1 & -1 & -1 & -1 & -1 & -1 & -1 & -1 & -1 & -1 & -1 & -1 & -1 & -1 & -1 & 73 & -1 & -1 & -1 & -1 & 96 & -1 & -1 & -1 & 66 & -1 & -1 & -1 & -1 & -1 & -1 & -1 & -1 & -1 & -1 & -1 & -1 & -1 & -1 & -1 & -1 & -1 \\
-1 & -1 & -1 & -1 & -1 & -1 & -1 & -1 & -1 & -1 & -1 & -1 & -1 & -1 & -1 & -1 & -1 & -1 & -1 & -1 & -1 & 85 & -1 & -1 & -1 & 66 & -1 & -1 & -1 & -1 & 2 & -1 & -1 & -1 & -1 & -1 & -1 & -1 & -1 & -1 & -1 & -1 & -1 & -1 \\
-1 & -1 & -1 & -1 & -1 & -1 & -1 & -1 & -1 & -1 & -1 & -1 & -1 & -1 & -1 & -1 & -1 & -1 & -1 & -1 & -1 & -1 & 85 & -1 & -1 & -1 & 66 & -1 & -1 & -1 & -1 & 2 & -1 & -1 & -1 & -1 & -1 & -1 & -1 & -1 & -1 & -1 & -1 & -1 \\
-1 & -1 & -1 & -1 & -1 & -1 & -1 & -1 & -1 & -1 & -1 & -1 & -1 & -1 & -1 & -1 & -1 & -1 & -1 & -1 & -1 & -1 & -1 & 85 & -1 & -1 & -1 & 66 & 2 & -1 & -1 & -1 & -1 & -1 & -1 & -1 & -1 & -1 & -1 & -1 & -1 & -1 & -1 & -1 \\
-1 & -1 & -1 & -1 & -1 & -1 & -1 & -1 & -1 & -1 & -1 & -1 & -1 & -1 & -1 & -1 & -1 & -1 & -1 & -1 & 85 & -1 & -1 & -1 & 66 & -1 & -1 & -1 & -1 & 2 & -1 & -1 & -1 & -1 & -1 & -1 & -1 & -1 & -1 & -1 & -1 & -1 & -1 & -1 \\
-1 & -1 & -1 & -1 & -1 & -1 & -1 & -1 & -1 & -1 & -1 & -1 & -1 & -1 & -1 & -1 & -1 & -1 & -1 & -1 & -1 & 90 & -1 & -1 & -1 & -1 & -1 & 57 & 2 & -1 & -1 & -1 & -1 & -1 & -1 & -1 & -1 & -1 & -1 & -1 & -1 & -1 & -1 & -1 \\
-1 & -1 & -1 & -1 & -1 & -1 & -1 & -1 & -1 & -1 & -1 & -1 & -1 & -1 & -1 & -1 & -1 & -1 & -1 & -1 & -1 & -1 & 90 & -1 & 57 & -1 & -1 & -1 & -1 & 2 & -1 & -1 & -1 & -1 & -1 & -1 & -1 & -1 & -1 & -1 & -1 & -1 & -1 & -1 \\
-1 & -1 & -1 & -1 & -1 & -1 & -1 & -1 & -1 & -1 & -1 & -1 & -1 & -1 & -1 & -1 & -1 & -1 & -1 & -1 & -1 & -1 & -1 & 90 & -1 & 57 & -1 & -1 & -1 & -1 & 2 & -1 & -1 & -1 & -1 & -1 & -1 & -1 & -1 & -1 & -1 & -1 & -1 & -1 \\
-1 & -1 & -1 & -1 & -1 & -1 & -1 & -1 & -1 & -1 & -1 & -1 & -1 & -1 & -1 & -1 & -1 & -1 & -1 & -1 & 90 & -1 & -1 & -1 & -1 & -1 & 57 & -1 & -1 & -1 & -1 & 2 & -1 & -1 & -1 & -1 & -1 & -1 & -1 & -1 & -1 & -1 & -1 & -1 \\
-1 & -1 & -1 & -1 & -1 & -1 & -1 & -1 & -1 & -1 & -1 & -1 & -1 & -1 & -1 & -1 & -1 & -1 & -1 & -1 & -1 & -1 & -1 & -1 & -1 & -1 & 12 & -1 & 83 & -1 & -1 & -1 & 73 & -1 & -1 & -1 & -1 & -1 & -1 & -1 & -1 & -1 & -1 & -1 \\
-1 & -1 & -1 & -1 & -1 & -1 & -1 & -1 & -1 & -1 & -1 & -1 & -1 & -1 & -1 & -1 & -1 & -1 & -1 & -1 & -1 & -1 & -1 & -1 & -1 & -1 & -1 & 12 & -1 & 83 & -1 & -1 & -1 & 73 & -1 & -1 & -1 & -1 & -1 & -1 & -1 & -1 & -1 & -1 \\
-1 & -1 & -1 & -1 & -1 & -1 & -1 & -1 & -1 & -1 & -1 & -1 & -1 & -1 & -1 & -1 & -1 & -1 & -1 & -1 & -1 & -1 & -1 & -1 & 12 & -1 & -1 & -1 & -1 & -1 & 83 & -1 & -1 & -1 & 73 & -1 & -1 & -1 & -1 & -1 & -1 & -1 & -1 & -1 \\
-1 & -1 & -1 & -1 & -1 & -1 & -1 & -1 & -1 & -1 & -1 & -1 & -1 & -1 & -1 & -1 & -1 & -1 & -1 & -1 & -1 & -1 & -1 & -1 & -1 & 12 & -1 & -1 & -1 & -1 & -1 & 83 & -1 & -1 & -1 & 73 & -1 & -1 & -1 & -1 & -1 & -1 & -1 & -1 \\
-1 & -1 & -1 & -1 & -1 & -1 & -1 & -1 & -1 & -1 & -1 & -1 & -1 & -1 & -1 & -1 & -1 & -1 & -1 & -1 & -1 & -1 & -1 & -1 & -1 & -1 & -1 & 91 & -1 & 17 & -1 & -1 & 50 & -1 & -1 & -1 & -1 & -1 & -1 & -1 & -1 & -1 & -1 & -1 \\
-1 & -1 & -1 & -1 & -1 & -1 & -1 & -1 & -1 & -1 & -1 & -1 & -1 & -1 & -1 & -1 & -1 & -1 & -1 & -1 & -1 & -1 & -1 & -1 & 91 & -1 & -1 & -1 & -1 & -1 & 17 & -1 & -1 & 50 & -1 & -1 & -1 & -1 & -1 & -1 & -1 & -1 & -1 & -1 \\
-1 & -1 & -1 & -1 & -1 & -1 & -1 & -1 & -1 & -1 & -1 & -1 & -1 & -1 & -1 & -1 & -1 & -1 & -1 & -1 & -1 & -1 & -1 & -1 & -1 & 91 & -1 & -1 & -1 & -1 & -1 & 17 & -1 & -1 & 50 & -1 & -1 & -1 & -1 & -1 & -1 & -1 & -1 & -1 \\
-1 & -1 & -1 & -1 & -1 & -1 & -1 & -1 & -1 & -1 & -1 & -1 & -1 & -1 & -1 & -1 & -1 & -1 & -1 & -1 & -1 & -1 & -1 & -1 & -1 & -1 & 91 & -1 & 17 & -1 & -1 & -1 & -1 & -1 & -1 & 50 & -1 & -1 & -1 & -1 & -1 & -1 & -1 & -1 \\
-1 & -1 & -1 & -1 & -1 & -1 & -1 & -1 & -1 & -1 & -1 & -1 & -1 & -1 & -1 & -1 & -1 & -1 & -1 & -1 & -1 & -1 & -1 & -1 & -1 & -1 & -1 & -1 & -1 & -1 & 57 & -1 & 34 & -1 & -1 & -1 & -1 & -1 & -1 & 55 & -1 & -1 & -1 & -1 \\
-1 & -1 & -1 & -1 & -1 & -1 & -1 & -1 & -1 & -1 & -1 & -1 & -1 & -1 & -1 & -1 & -1 & -1 & -1 & -1 & -1 & -1 & -1 & -1 & -1 & -1 & -1 & -1 & -1 & -1 & -1 & 57 & -1 & 34 & -1 & -1 & 55 & -1 & -1 & -1 & -1 & -1 & -1 & -1 \\
-1 & -1 & -1 & -1 & -1 & -1 & -1 & -1 & -1 & -1 & -1 & -1 & -1 & -1 & -1 & -1 & -1 & -1 & -1 & -1 & -1 & -1 & -1 & -1 & -1 & -1 & -1 & -1 & 57 & -1 & -1 & -1 & -1 & -1 & 34 & -1 & -1 & 55 & -1 & -1 & -1 & -1 & -1 & -1 \\
-1 & -1 & -1 & -1 & -1 & -1 & -1 & -1 & -1 & -1 & -1 & -1 & -1 & -1 & -1 & -1 & -1 & -1 & -1 & -1 & -1 & -1 & -1 & -1 & -1 & -1 & -1 & -1 & -1 & 57 & -1 & -1 & -1 & -1 & -1 & 34 & -1 & -1 & 55 & -1 & -1 & -1 & -1 & -1 \\
-1 & -1 & -1 & -1 & -1 & -1 & -1 & -1 & -1 & -1 & -1 & -1 & -1 & -1 & -1 & -1 & -1 & -1 & -1 & -1 & -1 & -1 & -1 & -1 & -1 & -1 & -1 & -1 & -1 & -1 & -1 & 25 & -1 & -1 & -1 & 92 & -1 & -1 & 78 & -1 & -1 & -1 & -1 & -1 \\
-1 & -1 & -1 & -1 & -1 & -1 & -1 & -1 & -1 & -1 & -1 & -1 & -1 & -1 & -1 & -1 & -1 & -1 & -1 & -1 & -1 & -1 & -1 & -1 & -1 & -1 & -1 & -1 & 25 & -1 & -1 & -1 & 92 & -1 & -1 & -1 & -1 & -1 & -1 & 78 & -1 & -1 & -1 & -1 \\
-1 & -1 & -1 & -1 & -1 & -1 & -1 & -1 & -1 & -1 & -1 & -1 & -1 & -1 & -1 & -1 & -1 & -1 & -1 & -1 & -1 & -1 & -1 & -1 & -1 & -1 & -1 & -1 & -1 & 25 & -1 & -1 & -1 & 92 & -1 & -1 & 78 & -1 & -1 & -1 & -1 & -1 & -1 & -1 \\
-1 & -1 & -1 & -1 & -1 & -1 & -1 & -1 & -1 & -1 & -1 & -1 & -1 & -1 & -1 & -1 & -1 & -1 & -1 & -1 & -1 & -1 & -1 & -1 & -1 & -1 & -1 & -1 & -1 & -1 & 25 & -1 & -1 & -1 & 92 & -1 & -1 & 78 & -1 & -1 & -1 & -1 & -1 & -1 \\
-1 & -1 & -1 & -1 & -1 & -1 & -1 & -1 & -1 & -1 & -1 & -1 & -1 & -1 & -1 & -1 & -1 & -1 & -1 & -1 & -1 & -1 & -1 & -1 & -1 & -1 & -1 & -1 & -1 & -1 & -1 & -1 & -1 & 87 & -1 & -1 & -1 & -1 & -1 & 62 & -1 & -1 & -1 & 23 \\
-1 & -1 & -1 & -1 & -1 & -1 & -1 & -1 & -1 & -1 & -1 & -1 & -1 & -1 & -1 & -1 & -1 & -1 & -1 & -1 & -1 & -1 & -1 & -1 & -1 & -1 & -1 & -1 & -1 & -1 & -1 & -1 & -1 & -1 & 87 & -1 & 62 & -1 & -1 & -1 & 19 & -1 & -1 & -1 \\
-1 & -1 & -1 & -1 & -1 & -1 & -1 & -1 & -1 & -1 & -1 & -1 & -1 & -1 & -1 & -1 & -1 & -1 & -1 & -1 & -1 & -1 & -1 & -1 & -1 & -1 & -1 & -1 & -1 & -1 & -1 & -1 & -1 & -1 & -1 & 87 & -1 & 62 & -1 & -1 & -1 & 19 & -1 & -1 \\
-1 & -1 & -1 & -1 & -1 & -1 & -1 & -1 & -1 & -1 & -1 & -1 & -1 & -1 & -1 & -1 & -1 & -1 & -1 & -1 & -1 & -1 & -1 & -1 & -1 & -1 & -1 & -1 & -1 & -1 & -1 & -1 & 87 & -1 & -1 & -1 & -1 & -1 & 62 & -1 & -1 & -1 & 23 & -1 \\
-1 & -1 & -1 & -1 & -1 & -1 & -1 & -1 & -1 & -1 & -1 & -1 & -1 & -1 & -1 & -1 & -1 & -1 & -1 & -1 & -1 & -1 & -1 & -1 & -1 & -1 & -1 & -1 & -1 & -1 & -1 & -1 & -1 & -1 & 33 & -1 & 50 & -1 & -1 & -1 & -1 & -1 & -1 & 71 \\
-1 & -1 & -1 & -1 & -1 & -1 & -1 & -1 & -1 & -1 & -1 & -1 & -1 & -1 & -1 & -1 & -1 & -1 & -1 & -1 & -1 & -1 & -1 & -1 & -1 & -1 & -1 & -1 & -1 & -1 & -1 & -1 & -1 & -1 & -1 & 33 & -1 & 50 & -1 & -1 & 29 & -1 & -1 & -1 \\
-1 & -1 & -1 & -1 & -1 & -1 & -1 & -1 & -1 & -1 & -1 & -1 & -1 & -1 & -1 & -1 & -1 & -1 & -1 & -1 & -1 & -1 & -1 & -1 & -1 & -1 & -1 & -1 & -1 & -1 & -1 & -1 & 33 & -1 & -1 & -1 & -1 & -1 & 50 & -1 & -1 & 29 & -1 & -1 \\
-1 & -1 & -1 & -1 & -1 & -1 & -1 & -1 & -1 & -1 & -1 & -1 & -1 & -1 & -1 & -1 & -1 & -1 & -1 & -1 & -1 & -1 & -1 & -1 & -1 & -1 & -1 & -1 & -1 & -1 & -1 & -1 & -1 & 33 & -1 & -1 & -1 & -1 & -1 & 50 & -1 & -1 & 71 & -1 \\
-1 & -1 & -1 & -1 & -1 & -1 & -1 & -1 & -1 & -1 & -1 & -1 & -1 & -1 & -1 & -1 & -1 & -1 & -1 & -1 & -1 & -1 & -1 & -1 & -1 & -1 & -1 & -1 & -1 & -1 & -1 & -1 & -1 & -1 & -1 & -1 & -1 & -1 & -1 & 31 & -1 & 66 & 82 & -1 \\
-1 & -1 & -1 & -1 & -1 & -1 & -1 & -1 & -1 & -1 & -1 & -1 & -1 & -1 & -1 & -1 & -1 & -1 & -1 & -1 & -1 & -1 & -1 & -1 & -1 & -1 & -1 & -1 & -1 & -1 & -1 & -1 & -1 & -1 & -1 & -1 & 31 & -1 & -1 & -1 & -1 & -1 & 35 & 82 \\
-1 & -1 & -1 & -1 & -1 & -1 & -1 & -1 & -1 & -1 & -1 & -1 & -1 & -1 & -1 & -1 & -1 & -1 & -1 & -1 & -1 & -1 & -1 & -1 & -1 & -1 & -1 & -1 & -1 & -1 & -1 & -1 & -1 & -1 & -1 & -1 & -1 & 31 & -1 & -1 & 25 & -1 & -1 & 35 \\
-1 & -1 & -1 & -1 & -1 & -1 & -1 & -1 & -1 & -1 & -1 & -1 & -1 & -1 & -1 & -1 & -1 & -1 & -1 & -1 & -1 & -1 & -1 & -1 & -1 & -1 & -1 & -1 & -1 & -1 & -1 & -1 & -1 & -1 & -1 & -1 & -1 & -1 & 31 & -1 & 66 & 25 & -1 & -1 \\
-1 & -1 & -1 & -1 & -1 & -1 & -1 & -1 & -1 & -1 & -1 & -1 & -1 & -1 & -1 & -1 & -1 & -1 & -1 & -1 & -1 & -1 & -1 & -1 & -1 & -1 & -1 & -1 & -1 & -1 & -1 & -1 & -1 & -1 & -1 & -1 & -1 & -1 & -1 & 19 & -1 & 95 & 47 & -1 \\
-1 & -1 & -1 & -1 & -1 & -1 & -1 & -1 & -1 & -1 & -1 & -1 & -1 & -1 & -1 & -1 & -1 & -1 & -1 & -1 & -1 & -1 & -1 & -1 & -1 & -1 & -1 & -1 & -1 & -1 & -1 & -1 & -1 & -1 & -1 & -1 & 19 & -1 & -1 & -1 & -1 & -1 & 17 & 47 \\
-1 & -1 & -1 & -1 & -1 & -1 & -1 & -1 & -1 & -1 & -1 & -1 & -1 & -1 & -1 & -1 & -1 & -1 & -1 & -1 & -1 & -1 & -1 & -1 & -1 & -1 & -1 & -1 & -1 & -1 & -1 & -1 & -1 & -1 & -1 & -1 & -1 & 19 & -1 & -1 & 3 & -1 & -1 & 17 \\
-1 & -1 & -1 & -1 & -1 & -1 & -1 & -1 & -1 & -1 & -1 & -1 & -1 & -1 & -1 & -1 & -1 & -1 & -1 & -1 & -1 & -1 & -1 & -1 & -1 & -1 & -1 & -1 & -1 & -1 & -1 & -1 & -1 & -1 & -1 & -1 & -1 & -1 & 19 & -1 & 95 & 3 & -1 & -1
\end{bmatrix}.$$

$$B_2 = \begin{bmatrix}
-1 & -1 & 748 & -1 & -1 & 3 & -1 & -1 & -1 & -1 & -1 & -1 & -1 & -1 & -1 & -1 & -1 & -1 & -1 & -1 & -1 & -1 & -1 & -1 \\
-1 & -1 & -1 & 748 & -1 & -1 & 3 & -1 & -1 & -1 & -1 & -1 & -1 & -1 & -1 & -1 & -1 & -1 & -1 & -1 & -1 & -1 & -1 & -1 \\
748 & -1 & -1 & -1 & -1 & -1 & -1 & 3 & -1 & -1 & -1 & -1 & -1 & -1 & -1 & -1 & -1 & -1 & -1 & -1 & -1 & -1 & -1 & -1 \\
-1 & 748 & -1 & -1 & 3 & -1 & -1 & -1 & -1 & -1 & -1 & -1 & -1 & -1 & -1 & -1 & -1 & -1 & -1 & -1 & -1 & -1 & -1 & -1 \\
-1 & 127 & -1 & -1 & -1 & 941 & -1 & -1 & -1 & 855 & -1 & -1 & 808 & -1 & -1 & -1 & -1 & -1 & -1 & -1 & -1 & -1 & -1 & -1 \\
-1 & -1 & 127 & -1 & -1 & -1 & 941 & -1 & -1 & -1 & 855 & -1 & -1 & 808 & -1 & -1 & -1 & -1 & -1 & -1 & -1 & -1 & -1 & -1 \\
-1 & -1 & -1 & 127 & -1 & -1 & -1 & 941 & -1 & -1 & -1 & 855 & -1 & -1 & 808 & -1 & -1 & -1 & -1 & -1 & -1 & -1 & -1 & -1 \\
127 & -1 & -1 & -1 & 941 & -1 & -1 & -1 & 855 & -1 & -1 & -1 & -1 & -1 & -1 & 808 & -1 & -1 & -1 & -1 & -1 & -1 & -1 & -1 \\
382 & -1 & -1 & -1 & -1 & -1 & -1 & 5 & -1 & 228 & -1 & -1 & 366 & -1 & -1 & -1 & -1 & 242 & -1 & -1 & -1 & -1 & -1 & 683 \\
-1 & 382 & -1 & -1 & 5 & -1 & -1 & -1 & -1 & -1 & 228 & -1 & -1 & 366 & -1 & -1 & -1 & -1 & 242 & -1 & 683 & -1 & -1 & -1 \\
-1 & -1 & 382 & -1 & -1 & 5 & -1 & -1 & -1 & -1 & -1 & 228 & -1 & -1 & 366 & -1 & -1 & -1 & -1 & 242 & -1 & 683 & -1 & -1 \\
-1 & -1 & -1 & 382 & -1 & -1 & 5 & -1 & 228 & -1 & -1 & -1 & -1 & -1 & -1 & 366 & 242 & -1 & -1 & -1 & -1 & -1 & 683 & -1 \\
-1 & -1 & 391 & -1 & -1 & -1 & -1 & 246 & -1 & 920 & 728 & -1 & 952 & -1 & 602 & -1 & 295 & 621 & 847 & -1 & 506 & 884 & -1 & 302 \\
-1 & -1 & -1 & 391 & 246 & -1 & -1 & -1 & -1 & -1 & 920 & 728 & -1 & 952 & -1 & 602 & -1 & 295 & 621 & 847 & 302 & 506 & 884 & -1 \\
22 & -1 & -1 & -1 & -1 & 624 & -1 & -1 & 884 & -1 & -1 & 473 & 622 & -1 & 982 & -1 & 644 & -1 & 794 & 598 & -1 & 614 & 511 & 213 \\
-1 & 22 & -1 & -1 & -1 & -1 & 624 & -1 & 473 & 884 & -1 & -1 & -1 & 622 & -1 & 982 & 598 & 644 & -1 & 794 & 213 & -1 & 614 & 511
\end{bmatrix}.$$

[14] R. M. Tanner, D. Sridhara, and T. Fuja, "A class of group-structured LDPC codes," *Proc. Int. Symp. on Commun. Theory Applications*, Ambleside, England, Jul. 2001.

[15] B. Vasic, "Combinatorial constructions of low-density parity check codes

for iterative decoding," *Proc. IEEE Int. Symp. Information Theory*, Lausanne, Switzerland, July 2002, p. 312.

[16] I. Djurdjevic, J. Xu, K. Abdel-Ghaffar, and S. Lin, "A class of low-density parity-check codes constructed based on Reed-Solomon codes with two information symbols," *IEEE Commun. Lett.*, vol. 7, pp. 317319, July 2003.

[17] D. Sridhara, T. Fuja, and R. M. Tanner, "Low density parity check codes from permutation matrices," *Proc. Conf. on Inform. Sciences and Systems*, Baltimore, MD, Mar. 2001.

[18] T. Okamura, "Designing LDPC codes using cyclic shifts," *Proc. IEEE Int. Symp. Information Theory*, Yokohama, Japan, June/July 2003, p. 151.

[19] R. M. Tanner, D. Sridhara, T. Fuja, and D. J. Costello Jr., "LDPC block and convolutional codes based on circulant matrices," *IEEE Trans. Inform. Theory*, vol. 50, pp. 2966-2984, Dec. 2004.

[20] M. Lentaier, A. Sridharan, K. S. Zingangirov, and D. J. Costello, Jr., "Iterative decoding threshold analysis for LDPC convolutional codes," *IEEE Trans. Inform. Theory*, vol. 56, pp. 5274-5289, Oct. 2010.

[21] S. Kudekar, T. Richardson, and R. Urbanke, "Threshold saturation via spatial coupling: why convolutional LDPC ensembles perform so well over the BEC," *IEEE Trans. Inform. Theory* to appear.

[22] T. J. Richardson, "Error Floors of LDPC Codes," *Proc. 41st Annual Allerton Conf. on Communications, Control and Computing*, 2003.

[23] S. K. Chilappagari, S. Sankaranarayanan and B. Vasic, "Error floors of LDPC codes on the binary symmetric channel," Proc. IEEE Int. Conf. on Commun., Jun. 2006, pp. 1089-1094.

[24] R. M. Tanner, "A recursive approach to low-complexity codes," *IEEE Trans. Inform. Theory*, vol. IT-27, no. 5, pp. 533-547, Sept. 1981.

[25] X.-Y. Hu, E. Eleftheriou, and D.-M. Arnold, "Irregular progressive-edge growth (PEG) Tanner graphs," *Proc. IEEE Int. Symp. Information Theory*, Lausanne, Switzerland, July 2002, p. 480.

[26] Z. Li and B.V.K.V. Kumar, "A class of good quasi-cyclic Low-density parity check codes based on progressive edge growth graph," *Eighth Asilomar Conference on Signals, Systems, and Computers*, 2004, pp. 1990-1994.

[27] M. P. C. Fossorier, "Quasi-cyclic low-density parity-check codes from circulant permutation matrices," *IEEE Trans. Inform. Theory*, vol. 50, no. 8, pp. 1788-1793, Aug. 2004.

[28] J. Thorpe, "Low-density parity-check (LDPC) codes constructed from protographs," *JPL IPN Progress Report 42-154*, Aug. 2003.

[29] R. Smarandache and P. O. Vontobel, "Quasi-Cyclic LDPC Codes: Ifluence of Proto- and Tanner-Graph Structure on Minimum Hamming Distance Upper Bounds," *IEEE Trans. Inform. Theory*, submitted [arXiv:0901.4129v1].

[30] O. Milenkovic, D. Leyba, and N. Kashyap, "Shortened Array Codes of Large Girth," *IEEE Trans. Inform. Theory*, vol. 5, no. 8, pp. 3707-3722, Aug. 2006.

[31] I. E. Bocharova, F. Hug, R. Johannesson, B. D. Kudryashov, and R. V. Satyukov "Searching for Voltage Graph-Based LDPC Tailbiting Codes with Large Girth," *IEEE Trans. Inform. Theory*, submitted [arXiv:1108.0840v1].